Razor®

RSF 650™

YOUTH ELECTRIC SPORT BIKE

OWNER'S MANUAL

Read and understand this entire manual <u>before</u> allowing child to use this product! For assistance contact Razor. DO NOT RETURN TO STORE.

NOTE: Manual illustrations are for demonstration purposes only. Illustrations may not reflect exact appearance of actual product. Specifications subject to change without notice.

Please have your product along with the 19 character product I.D. code with you before contacting Razor for warranty assistance and/or replacement parts.

Product I.D. Code: _____ - _____ - _____

CONTENTS

Safety Warnings 1-2
Before You Begin 3
Assembly and Set-Up 4
Charging the Battery 5
Pre-Ride Checklist 5
Repair and Maintenance 6-8
Troubleshooting Guide 9-10
Product Parts 11
Warranty and Contact Information 14

SAFETY WARNINGS

WARNING: Riding an electric motor bike does present potential risks and caution is required. Like any riding product, an electric motor bike has inherent hazards associated with its use (for example, falling off or riding it into a hazardous situation). Like any riding product, electric motor bikes can and are intended to move and it is therefore, of course, possible to lose control or otherwise get into dangerous situations. Both children, and adults responsible for supervising them, must recognize that if such things occur, a rider can be seriously injured or die even when using safety equipment and other precautions. RIDE AT YOUR OWN RISK AND USE COMMON SENSE.

WARNING: PARENTAL AND ADULT RESPONSIBILITY AND SUPERVISION NECESSARY: This manual contains important safety information. It is your responsibility to review this information and make sure that all riders understand all warnings, cautions, instructions and safety topics, and assure that riders are able to safely and responsibly use these products. Razor recommends that you periodically review and reinforce the information in this manual with younger riders, and that you inspect and maintain your children's product to insure their safety.

WARNING: THE RSF650 IS NOT FOR CHILDREN UNDER AGE 16 OR HEAVIER THAN 220 LB (100 KG). Because products, like electric motor bikes, can and do present potential hazards plainly associated with their use, it is well recognized THE NEED FOR EXERCISE OF PARENTAL RESPONSIBILITY IN SELECTING RIDING PRODUCTS APPROPRIATE TO THE AGE OF A CHILD, OR PARENTAL SUPERVISION IN SITUATIONS IN WHICH CHILDREN OF VARIOUS AGES MAY HAVE ACCESS TO THE SAME RIDING PRODUCTS, IS IMPORTANT. Not every product is appropriate for every age or size of child, and different age recommendations are found within this category of product which are intended to reflect the nature of the hazards and the expected mental or physical ability, or both, of a rider to cope with the hazards.

Razor recommends that children under the age of 16 not be permitted to use the RSF650. This recommendation is based not just on age or weight or height; it reflects consideration of expected maturity and skills as well as physical size. The recommended rider age of 16 years or older for RSF650 only on estimate and can be affected by the rider's size, weight or skills not every child 16 years old will be suited to the RSF650. Certainly, any rider unable to fit comfortably on the product should not attempt to ride it, but a **parent's decision to allow his or her child to ride this product should be based on the child's maturity, skill, and ability to follow rules. Razor emphasizes that adults are strongly advised not to disregard Razor's recommendations or permit younger children to ride the RSF650.**

DO NOT EXCEED THE WEIGHT LIMIT OF 220 lb (100 kg) for RSF650. Rider weight alone also does not necessarily mean a person's size is appropriate to fit or maintain control of the RSF650. Keep this product away from small children and remember that this product is intended for use only by persons who are, at a minimum, completely comfortable and competent while operating the RSF650.

Persons with any mental or physical conditions that may make them susceptible to injury, impair their physical dexterity or mental capabilities to recognize, understand, and follow safety instructions and to be able to understand the hazards inherent in a product's use, should not use or be permitted to use products inappropriate for their abilities. Persons with heart conditions, head, back or neck ailments (or prior surgeries to these areas of the body), or pregnant women, should be cautioned not to operate this product.

NOTICE: This manual contains many warnings and cautions concerning the consequences of failing to maintain, inspect or properly use your electric motor bike. Because any incident can result in serious injury or even death, we do not repeat the warning of possible serious injury or death each time such a possibility is mentioned.

CHECK AND MAINTAIN MOTOR BIKE CONDITIONS

Before use, check to confirm that any and all chain guards or other covers and guards are in place and in serviceable condition. Check that the brakes are functioning properly, and that tires are inflated properly and have sufficient tread remaining. The electric motor bike should be maintained and repaired in accordance with the manufacturer's specifications, using only the manufacturer's authorized replacement parts, and should not be modified from the manufacturer's original design and configuration. Replace loose or broken parts immediately.

ACCEPTABLE RIDING PRACTICES AND CONDITIONS

ALWAYS CHECK AND OBEY ANY LOCAL LAWS OR REGULATIONS, WHICH MAY AFFECT THE LOCATIONS WHERE THE ELECTRIC MOTOR BIKE MAY BE USED.

Keep safely away from cars and motor vehicle traffic at all times, and only use where allowed and with caution.

Do not activate the twist-grip throttle on the handbars unless you are on the electric motor bike and in a safe, outdoor environment suitable for riding.

The normal powered top speed of this electric motor bike will be approximately 17 mph (27 km/h), which can be affected by conditions, such as rider weight, inclines, tire inflation and battery charge level. Avoid excessive speeds that can be associated with downhill rides.

Maintain a hold on the handlebars at all times. Do not touch the brakes or motor on your electric motor bike when in use or immediately after riding, as these parts can become very hot.

Ride defensively. Watch out for potential obstacles that could catch your wheel or force you to swerve suddenly or lose control. Be careful to avoid pedestrians, skaters, skateboards, scooters, bikes, children or animals who may enter your path, and respect the rights and property of others.

This electric motor bike is intended for use on flat, dry surfaces, such as pavement or level ground, without loose debris, such as sand, leaves, rocks or gravel. Wet, slick, bumpy, uneven or rough surfaces may impair traction and contribute to possible accidents. Do not ride your electric motor bike in mud, ice, puddles or water. Watch out for potential obstacles that could catch your wheel or force you to swerve suddenly or lose control. Avoid sharp bumps, drainage grates, and sudden surface changes.

Do not attempt or do stunts or tricks on your electric motor bike. This electric motor bike is not made to withstand abuse from misuse, such as jumping, curb grinding or any other type of stunts. Racing, stunt riding, or other maneuvers also enhance risk of loss of control, or may cause uncontrolled rider actions or reactions.

Never allow more than one person at a time to ride the electric motor bike.

Do not ride at night or when visibility is limited.

Never use near steps or swimming pools.

Do not allow hands, feet, hair, body parts, clothing, or similar articles to come in contact with moving parts, wheels, or drive train chain while the motor is running.

Never use headphones, a cell phone or text when riding.

Never hitch a ride with a vehicle.

Do not ride your electric motor bike in wet or icy weather and never immerse the electric motor bike in water, as the electrical and drive components could be damaged by water or create other possibly unsafe conditions. Never risk damaging surfaces, such as carpet or flooring, by use of an electric motor bike indoors.

PROPER RIDING ATTIRE

Always wear proper protective equipment, such as an approved safety helmet (with chin strap securely buckled), elbow pads and kneepads. A helmet may be legally required by local law or regulation in your area. A long-sleeved shirt, long pants, and gloves are recommended. Always wear athletic shoes (lace-up shoes with rubber soles) and keep shoelaces tied and out of the way of the wheels, motor and drive system. Never ride barefooted or in sandals.

USING THE CHARGER

The charger supplied with the electric motor bike should be regularly examined for damage to the cord, plug, enclosure and other parts. In the event of such damage, the electric motor bike must not be charged until the charger has been repaired or replaced.

Use only with the recommended charger.

Use caution when charging.

The charger is not a toy. Charger should be operated by an adult.

Do not operate charger near flammable materials.

Unplug charger and disconnect from electric motor bike when not in use.

Always disconnect from the charger prior to wiping down and cleaning your electric motor bike with damp cloth.

FAILURE TO USE COMMON SENSE AND HEED THE ABOVE WARNINGS INCREASES RISK OF SERIOUS INJURY. USE WITH APPROPRIATE CAUTION AND SERIOUS ATTENTION TO SAFE OPERATION.

Need Help? Visit our website for replacement parts, product support, a list of authorized service centers in the US and customer service contact information at **www.razor.com**. Please have the product I.D. code (located on the white label of your product) available for better assistance. Additional Customer Service contact information is listed at the back of this manual.

BEFORE YOU BEGIN

Remove contents from box. Remove the separators that protect the components from damage during shipping. Inspect the contents of the box for scratches in the paint, dents or kinked cables that may have occurred during shipping. Because the electric motor bike was 95 percent assembled and packed at the factory, there should not be any problems, even if the box has a few scars or dents.

MAKE SURE POWER SWITCH IS TURNED "OFF" BEFORE CONDUCTING ANY ASSEMBLY OR MAINTENANCE PROCEDURES.

❑ Estimated Assembly and Set-Up Time

Razor recommends assembly by an adult with experience in bicycle mechanics.
Allow up to 15 minutes for assembly, not including initial charge time.
Allow up to 12 hours for charge **(see page 5 for charging information).**

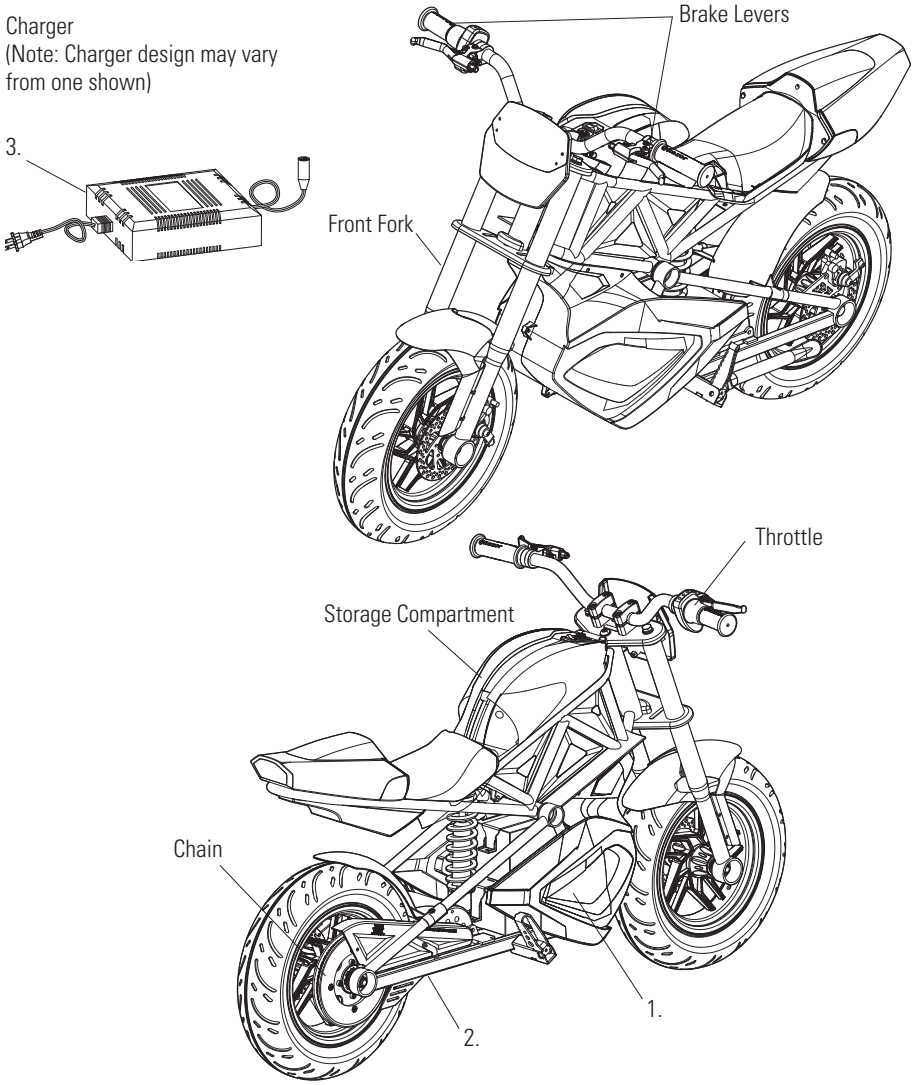

❑ Required Tools

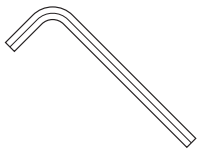

5 mm/6 mm Allen Wrench
(included)

⚠ WARNING: DO NOT USE NON-RAZOR PRODUCTS WITH YOUR RAZOR ELECTRIC MOTOR BIKE. The electric motor bike has been built to certain Razor design specifications. The original equipment supplied at the time of sale was selected on the basis of its compatibility with the frame, fork and all other parts. Certain aftermarket products may not be compatible and will void the warranty.

Product ID Locations:
(See locations to the left)

1. Battery cover
2. Frame (underneath unit)
3. Charger
4. Box - side of UPC (not shown)

Plastic Bag Contents:

- Charger
- Handlebar Clamps
- Tool
- Owner's Manual

❑ Attaching the Handlebars

Required Tools: 5 mm and 6 mm Allen Wrenches (included)

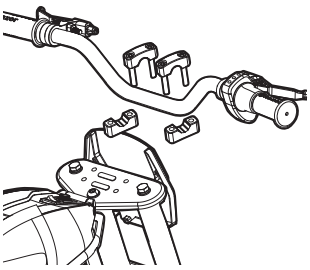

1 Place the handlebars in the handlebar clamps.

Note: Handlebar clamps are located in the plastic bag with tool and manual.

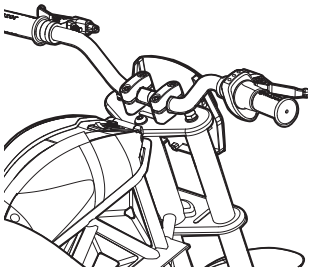

2 Align with the front fork and tighten the bolts using a 6 mm Allen wrench. When properly tightened, the handlebars should not move forward or backward.

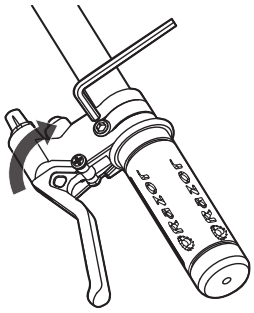

3 Adjust the brake levers to the proper place and tighten it with the 5 mm Allen wrench.

⚠ WARNING: Periodically check to make sure the handlebar clamp bolts are tightly fastened.

❑ Attaching the Front Plate

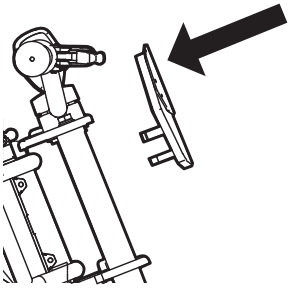

1 Align the two (2) tabs on the plate with the holes on the front fork and carefully push inward until plate clicks securely into place.

❑ Inflating the Tires

Tires are inflated when shipped, but they invariably lose some pressure between the point of manufacturing and your purchase. **Always inflate the tires to the correct PSI before first time use.**

Lower air pressure can result in a shorter ride time. Periodically check tires. Reinflate when needed.

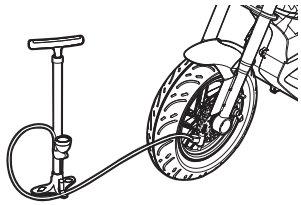

1 Using a bicycle-style tire pump equipped for a Schrader-type valve, inflate the tires to the correct PSI indicated on the sidewall of the tire.

⚠ WARNING:
Do not use the electric motor bike for the first time until you have inflated the tires to the correct PSI. Failure to do so may damage your electric scooter and void your warranty.

⚠ WARNING:
Do not over inflate, as this could damage tire or wheel.

Note: The pressurized air supplies found at gasoline stations are designed to inflate high-volume automobile tires. If you decide to use such an air supply to inflate your electric motor bike tires, first make sure the pressure gauge is working, then use very short bursts to inflate to the correct PSI. If you inadvertently over inflate the tire, release the excess pressure immediately.

Need Help? Visit our website for replacement parts, product support, a list of authorized service centers in the US and customer service contact information at **www.razor.com**. Please have the product I.D. code (located on the white label of your product) available for better assistance. Additional Customer Service contact information is listed at the back of this manual.

CHARGING THE BATTERY

Your electric motor bike may not have a fully charged battery; therefore you must charge the battery prior to use.

- Initial charge time: 12 hours.
- Recharge time: up to 12 hours, even if the light turns green. Recommended maximum charging time is 24 hours.
- Always charge the battery immediately after riding.
- Fully charge battery before storing for extended periods of time.
- Unplug charger from the wall outlet when not in use.
- Failure to recharge battery periodically may result in a battery that will not accept a charge.
- Make sure the power switch is turned **OFF** when unit is not in use. If the power switch is left on for an extended period of time, the battery may reach a stage at which it will no longer hold a charge.
- To ensure long battery life, never store the product in freezing or below freezing temperatures! Freezing will permanently damage the battery.
- Run time: Up to 50 minutes of continuous ride time. Run time may vary depending on riding conditions, rider weight, climate, and/or proper maintenance.
- Battery life can vary depending on proper maintenance and usage of the unit.

Charger

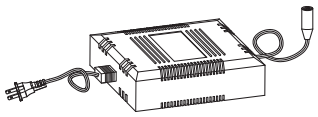

Note: Charger design may vary from one shown.

Make sure power switch is in the **OFF** position.

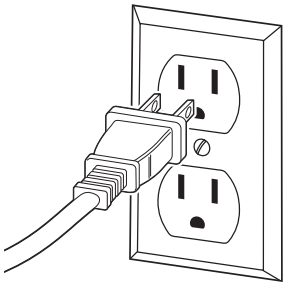

1 Plug the charger into a wall outlet. The light on the charger should be green.

Note: If green light (LED) does not light up, try a different outlet.

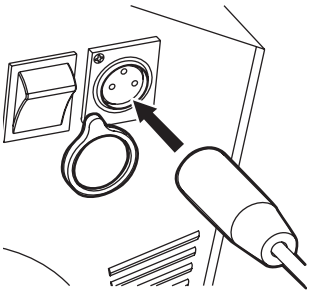

2 Plug the charger into the charger port. The light on the charger should turn red during charging then back to green when charging is complete.

⚠ WARNING: Use ONLY with the recommended charger. Batteries are only to be charged under adult supervision. The charger is not a toy. Always disconnect the charger before wiping down and/or cleaning the motor bike with a damp cloth.

The charger supplied with the electric motor bike should be regularly examined for damage to the cord, plug, enclosure and other parts. In the event of such damage, the electric motor bike must not be charged until it has been repaired or replaced.

Chargers have built-in overcharge protection to prevent battery from being overcharged.

Note: If the charger gets warm during regular use, this is a normal response and is no cause for concern. If your charger does not get warm during use, it does not mean that it is not working properly.

Wall outlet - Green
Wall outlet and unit - Red (charging)
Wall outlet and unit - Green (charged)

Note: Continue charging unit even if light turns green prior to 12 hours.

⚠ WARNING: Failure to recharge the battery at least once a month may result in a battery that will no longer accept a charge.

PRE-RIDE CHECKLIST

☐ **Brakes**
Check the brakes for proper function. When you squeeze the brake levers, the brakes should provide positive braking action. Make sure that brakes are not rubbing when the lever is released.

☐ **Tires**
Periodically inspect the tires for excess wear and regularly check the tire pressure. Reinflate as necessary.

☐ **Frame, Fork and Handlebars**
Check for cracks or broken connections. Although broken frames are rare, it is possible for an aggressive rider to run into a curb or object, and wreck and bend or break a frame. Get in the habit of inspecting your electric motor bike on a regular basis.

☐ **Hardware/Loose Parts**
Before every ride, check all parts, such as nuts, bolts, cables, fasteners, etc., to ensure they are secure and assembled correctly. There should not be any unusual rattles or sounds from loose parts or broken components. If the unit is damaged, do not ride. **Reference "Safety Warnings" on pages 1 and 2 of this manual.**

☐ **Safety Gear**
Always wear proper protective gear, such as an approved safety helmet. Elbow pads and kneepads are recommended. Always wear athletic shoes (lace-up shoes with rubber soles) and keep shoelaces tied and out of the way of the wheels, motor and drive system. NEVER RIDE BAREFOOTED OR IN SANDALS.

☐ **Laws and Regulations**
Always check and obey any local laws or regulations.

☐ **Insurance**
Do not assume that your existing insurance policies necessarily provide coverage for electric motor bike use. Check with your insurance company for information regarding insurance.

Need Help? Visit our website for replacement parts, product support, a list of authorized service centers in the US and customer service contact information at **www.razor.com**. Please have the product I.D. code (located on the white label of your product) available for better assistance. Additional Customer Service contact information is listed at the back of this manual.

REPAIR AND MAINTENANCE

Turn power switch "OFF" before beginning repair or maintenance:

- Read the instructions
- Remove charger plug
- Turn the power switch off
- Secure the product under repair
- Exercise caution around exposed parts
- Contact Razor customer service if unsure about any repair or maintenance

❑ Adjusting the Brakes

Required Tool: 5 mm Allen Wrench (included)

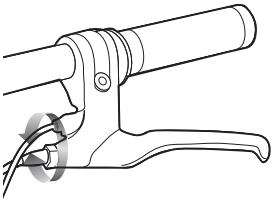

1 To adjust brake cable play, thread the brake lever adjuster in or out 1/4 to 1/2 turn until the desired brake adjustment is attained. Most adjustments are complete at this step. If brake still needs further adjustment, proceed to step 2.

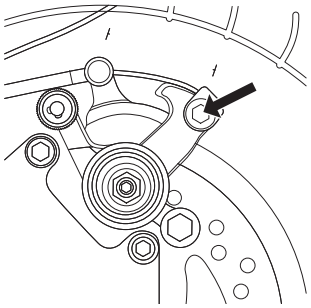

2 If the brake has too much slack, loosen the rear anchor bolt with a 5 mm Allen wrench and pull the brake wire tighter. The distance of the brake wire between the end of the cable and the anchor bolt should be between 37 mm and 44 mm.

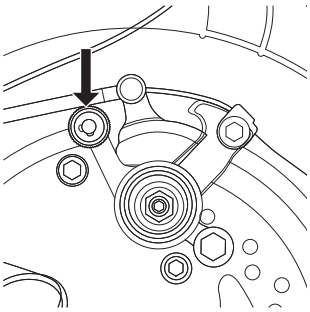

3 If the disc brake is dragging on the brake pads, use your fingers to twist the caliper adjuster in either direction until disc is centered between the brake pads.

⚠ WARNING: The brakes are capable of causing the electric motor bike to skid the tire throwing an unsuspecting rider. Practice in an open area free from obstacles until you are familiar with the brake function. Avoid skidding to a stop as this can cause you to lose control or damage the tires.

Testing the Brakes. To use the brakes, squeeze the brake levers to increase the pressure on the brakes. The brake levers are fitted with a cable adjuster to compensate for cable stretch and/or to fine-tune the lever movement to brake engagement. If brakes are not engaging properly, follow instructions for adjusting the brakes.

❑ Replacing the Fuse

Required Tools: Phillips Screwdriver, 4 mm Allen Wrench (not included)

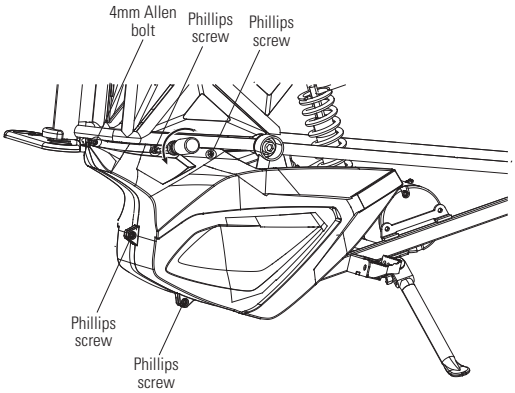

1 Loosen the 4mm Allen bolt and the four (4) Phillips screws on the battery cover. Remove cover.

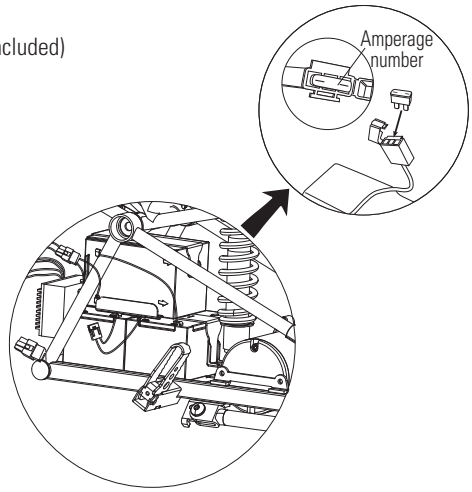

2 Locate the fuse box attached to the batteries. Check fuse to see if the fuse is burned out. Remove damaged or burned fuse and replace with a new one of equal amperage.

Note: Amperage is located on top of fuse.

⚠ WARNING: To prevent shock, please follow the instructions accordingly and do not skip any steps.

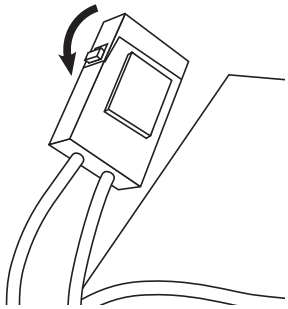

3 Close fuse box.

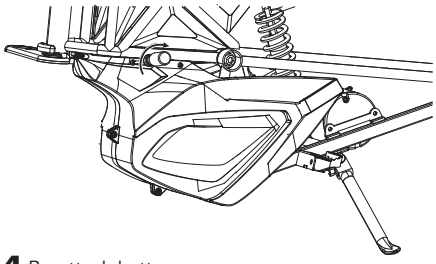

4 Re-attach battery cover.

❑ Replacing Front Wheel

Required Tools: Phillips Screwdriver, 14 mm and 17 mm Socket Wrenches (not included).

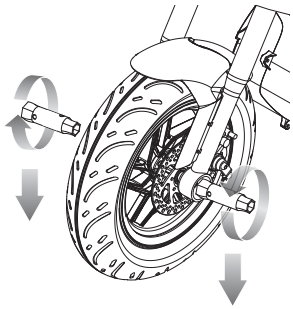

1 Loosen axle bolt using a 14 mm and a 17 mm socket wrench. Slide axle bolt out and remove front wheel.

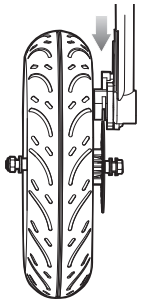

2 Position replacement wheel in front fork and insert disc brake into brake caliper.

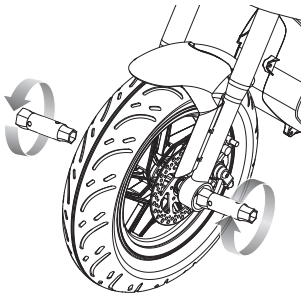

3 Slide axle bolt through the front fork, spacer and wheel hub. When axle bolt passes through the other side of the wheel hub, add the other spacer, and slide through the front fork. Secure with washer and nut.

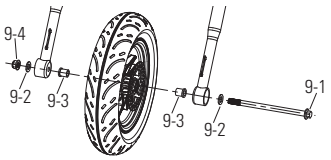

Note: the arrangement of the hardware sequence:

9-4 17mm Nut
9-2 Flat Washer
Front Fork
9-3 Spacer
Wheel
9-3 Spacer
Front Fork
9-2 Flat Washer
9-1 14mm Axle Bolt

⚠ WARNING: Failing to properly adjust and tighten the nuts and bolts that affix the front wheel can cause you to lose control and fall.

❑ Replacing the Chain and Rear Wheel

Required Tools: Phillips Screwdriver, 14 mm and 17 mm Socket Wrenches (not included).

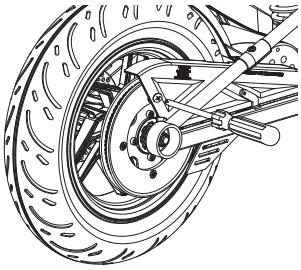

1 Loosen the two (2) Phillips screws and remove chain guard.

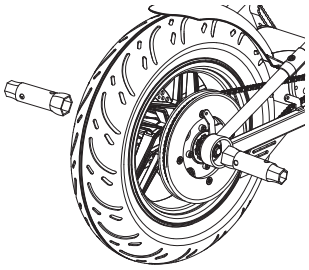

2 Using a 17 mm and 14 mm socket wrench, loosen the nut and axle bolt on the front wheel.

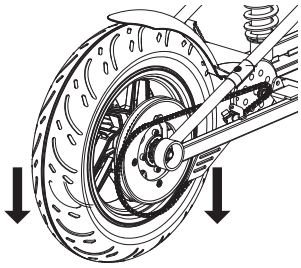

3 Push the chain tensioner down to loosen the chain and remove the chain from the wheel sprocket and motor sprocket. Push wheel downward to remove.

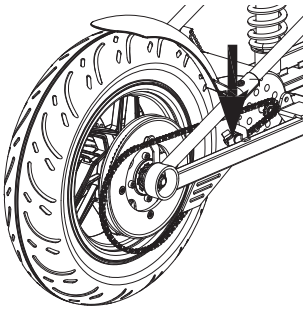

4 Install the new chain or wheel by slipping the chain around the axle bolt. Slide the axle bolt into the slots on the frame. Slide the chain tensioner down and maneuver the chain onto the rear sprocket and motor sprocket.

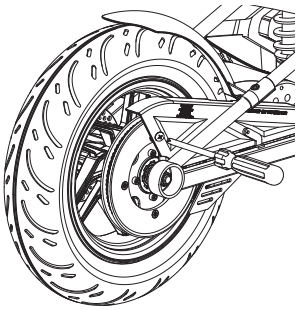

5 Re-attach the chain guard.

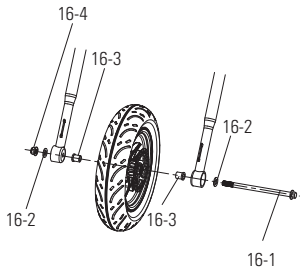

Note: the arrangement of the hardware sequence:

16-4 17mm Nut
16-2 Flat Washer
Frame
16-3 Spacer
Wheel
16-3 Spacer
Frame
16-2 Flat Washer
16-1 14mm Axle Bolt

⚠ WARNING: To avoid a pinch or injury, keep fingers away from moving sprockets and chain.

Need Help? Visit our web site for replacement parts, product support, a list of authorized service centers in the US and customer service contact information at **www.razor.com**. Please have the product I.D. code (located on the white label of your product) available for better assistance. Additional Customer Service contact information is listed at the back of this manual.

❑ Battery Care and Disposal

Never store the product in freezing or below freezing temperatures! Freezing will permanently damage the battery. Failure to recharge the battery at least once a month may result in a battery that will no longer accept a charge.

CONTAINS SEALED LEAD-ACID BATTERIES. BATTERIES MUST BE RECYCLED.

Disposal: Your Razor product uses sealed lead-acid batteries which must be recycled or disposed of in an environmentally safe manner. Do not dispose of a lead-acid battery in a fire; the battery may explode or leak. Do not dispose of a lead-acid battery in your regular household trash. The incineration, land filling or mixing of sealed lead-acid batteries with household trash is prohibited by law in most areas. Return exhausted batteries to a federal or state approved lead-acid battery recycler or a local seller of automotive batteries. If you live in Florida or Minnesota, it is prohibited by law to throw away lead-acid batteries in the municipal waste stream.

❑ Charger

The charger supplied with the electric motor bike should be regularly examined for damage to the cord, plug, enclosure and other parts, and in the event of such damage, the product must not be charged until it has been repaired or replaced.

Use ONLY with the recommended charger.

❑ Wheels

Wheels and drive system are subject to normal wear and tear. It is the responsibility of the user to periodically inspect wheels for excess wear and adjust and replace drive train components as required.

❑ Replacement Parts

The most frequently requested replacement parts are available for purchase at some Razor retail partners.
For the complete selection of replacement parts visit www.razor.com.

❑ Repair Centers

For a list of authorized Razor service centers:
- Check online at www.razor.com.
- Additional Customer Service contact information is listed at the back of this manual.

In the US and Canada only:
For more information regarding recycling of rechargeable batteries, call toll free 1-800-822-8837, or visit http://www.call2recycle.org

⚠ **WARNING:** If a battery leak develops, avoid contact with the leaking acid and place the damaged battery in a plastic bag. Refer to the disposal instructions at left. If acid comes into contact with skin or eyes, flush with cool water for at least 15 minutes and contact a physician.

⚠ **WARNING:** Battery posts, terminals and related accessories contain lead and lead compounds. **Wash your hands after handling.**

TROUBLESHOOTING GUIDE

Product should be fully charged prior to doing any troubleshooting and must be done by an adult ONLY.

Problem	Possible Cause	Solution
Does not work	Battery not fully charged	Charge unit for a full 12 hours.
	Loose connection(s)	Check for loose connections/wires.
		Check power to wall outlet and/or try a different outlet.
No longer works	Burned-out fuse	The fuse will burn out and automatically shut off the power if the motor is overloaded.
		An excessive overload, such as too heavy a rider or too steep a hill, could cause the motor to overheat. Replace the fuse(s) with a new one of equal amperage. Correct the conditions that caused the fuse to burn out and avoid repeatedly burning out fuse.
	Motor or electrical switch damage	Contact your local Razor authorized service center for diagnosis and repair.
	Loose connection(s)	Check for loose connections/wires.
	Charger not working	Check power to wall outlet and/or try a different outlet.
		Check lights on charger: Plugged into wall - Green Plugged into wall & unit - Red (charging) Plugged into wall & unit - Green (charging complete) No lights/Blinking lights - Replace Charger
	Battery will not hold a charge	Secure unit, turn power **ON** with no weight on the unit, carefully lift up back end and apply the throttle to engage the motor. If motor engages - replace battery.
		If motor does not engage, but makes a clicking sound - Replace Battery. If motor does not engage, no clicking sound - Replace Control Module.
Short run time/runs slow	Rider weight	Do not exceed the weight limit of 220 lb (100 kg) for RSF650.
	Battery not fully charged	Charge unit for a full 12 hours.
		Check all connectors. Make sure the charger connector is tightly plugged into the charging port, and that the charger is plugged into the wall.
	Old/damaged battery	Secure unit, turn power **ON** with no weight on the unit, carefully lift up back end and apply the throttle to engage the motor. If motor engages - replace battery.
		Charge battery periodically when not in use.
	Improper battery maintenance	Do not store unit in freezing or below freezing temperatures. Freezing will permanently damage the battery and greatly reduce ride time. Refer to page 5 “Charging the Battery”.
	Tire is not properly inflated	Tire will lose some pressure over time. Verify correct tire pressure.
	Brakes are not adjusted properly	Refer to “Adjusting the Brakes” on page 6.

Need Help? Visit our website for replacement parts, product support, a list of authorized service centers in the US and customer service contact information at **www.razor.com**. Please have the product I.D. code (located on the white label of your product) available for better assistance. Additional Customer Service contact information is listed at the back of this manual.

TROUBLESHOOTING GUIDE

Problem	Possible Cause	Solution
Runs intermittently	Loose connection(s)	Check for loose connections/wires.
	Motor or electrical switch damage	Contact your local Razor authorized service center for diagnosis and repair.
Electric motor bike does not stop when applying the brakes	Brakes are not adjusted properly	Refer to “Adjusting the Brakes“ on page 6
Electric motor bike makes loud noises or grinding sounds	Chain is too dry	Apply a lubricant, such as 3 in 1™ or Tri-Flow™ to the chain.

For more troubleshooting tips, a list of available replacement parts, or to locate an authorized Service Center in your area, visit our website at www.razor.com or call toll free +1 866 467 2967 to speak to a live Customer Service Representative

Need Help? Visit our web site for replacement parts, product support, a list of authorized service centers in the US and customer service contact information at **www.razor.com**. Please have the product I.D. code (located on the white label of your product) available for better assistance. Additional Customer Service contact information is listed at the back of this manual.

PRODUCT PARTS

Keep your electric motor bike running for years with genuine Razor parts. Visit our website for more information on spare part availability.
(Illustrations may not reflect exact appearance of actual product. Specifications subject to change without notice.)

1. Handlebar Grip (Right/Left)
2. Twist-Grip Throttle
   2-1 Sleeve
3. Handlebar
4. Front Brake Lever Assembly (Right)
5. Rear Brake Lever Assembly (Left)
6. Front Fork
7. Front Fender
8. Handlebar Clamp (Upper/Lower)
9. Front Wheel Complete
10. Caliper Brake (x2)
11. Shock Absorber
12. Control Module
13. Battery (3- 12V/ 12Ah) w/Fuse
14. Motor (36V/650W)
15. Kickstand
16. Rear Wheel Complete
17. Chain Tensioner
18. Chain
19. Chain Guard
20. Battery Cover (Left/Right)
21. Rear Fender
22. Seat Fairing
23. Storage Compartment
24. On/ Off Switch
25. Charger Port

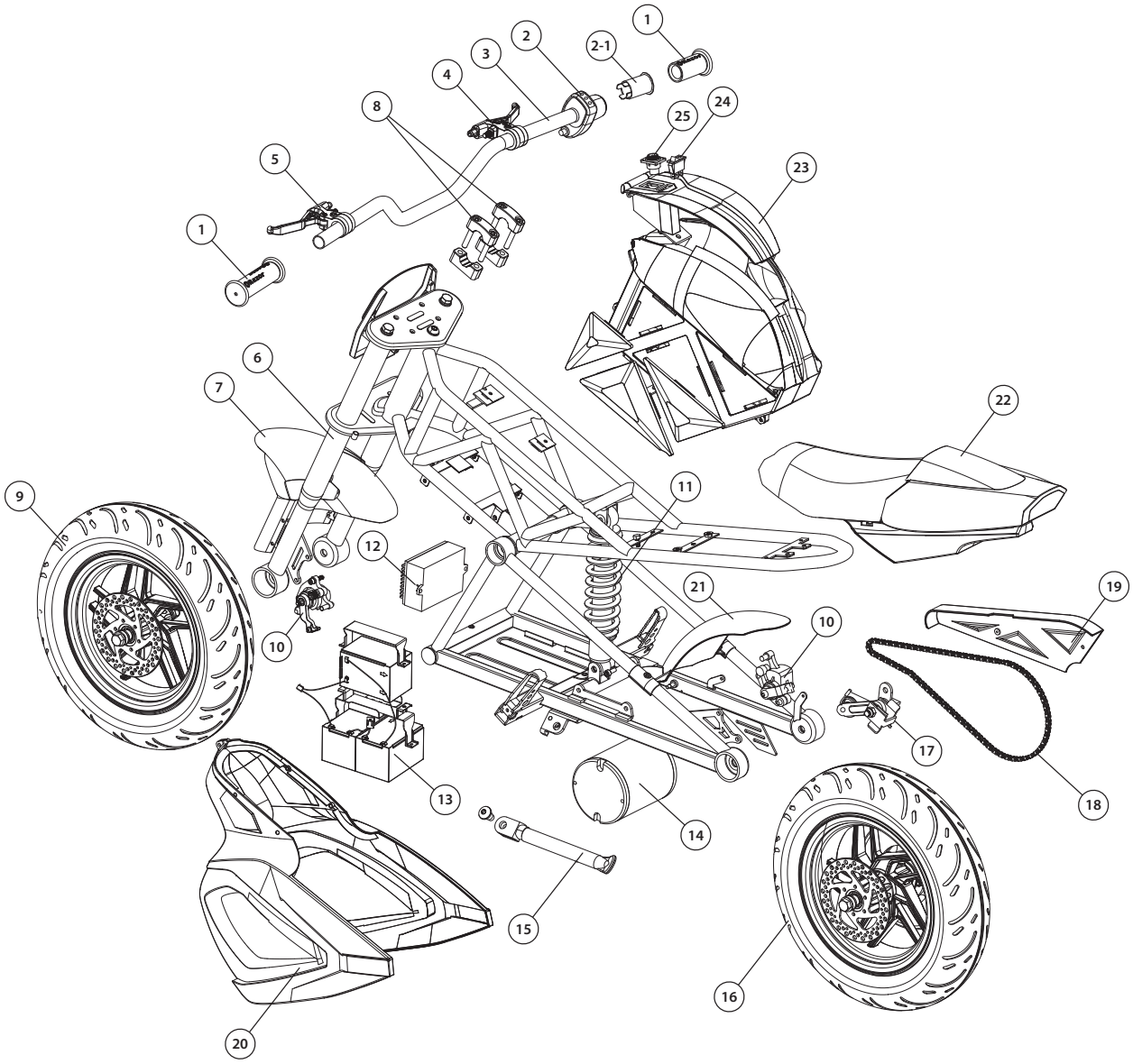

NOTICE: INSURANCE
YOUR INSURANCE POLICIES MAY NOT PROVIDE COVERAGE FOR ACCIDENTS INVOLVING THE USE OF THIS SCOOTER/ELECTRIC RIDE-ON PRODUCT. TO DETERMINE IF COVERAGE IS PROVIDED, YOU SHOULD CONTACT YOUR INSURANCE COMPANY OR AGENT.

FCC COMPLIANCE

This device complies with Part 15 of the FCC Rules. Operation is subject to the following two conditions: (1) This device may not cause harmful interference, and (2) this device must accept any interference received, including interference that may cause undesired operation.

Note: This equipment has been tested and found to comply with the limits for a Class B digital device, pursuant to part 15 of the FCC Rules. These limits are designed to provide reasonable protection against harmful interference in a residential installation. This equipment generates, uses and can radiate radio frequency energy and, if not installed and used in accordance with the instructions, may cause harmful interference to radio communications. However, there is no guarantee that interference will not occur in a particular installation. If this equipment does cause harmful interference to radio or television reception, which can be determined by turning the equipment off and on, the user is encouraged to try to correct the interference by one or more of the following measures:

- Reorient or relocate the receiving antenna.

- Increase the separation between the equipment and receiver.

- Connect the equipment into an outlet on a circuit different from that to which the receiver is connected.

- Consult the dealer or an experienced radio/TV technician for help.

⚠ **WARNING:** Changes or modifications to this unit not expressly approved by the party responsible for compliance, could void the user's authority to operate the equipment.

WARRANTY

Razor Limited Warranty

The manufacturer warranties this product to be free of manufacturing defects for a period of 90 days from date of purchase. This Limited Warranty does not cover normal wear and tear, tires, tubes or cables, or any damage, failure or loss caused by improper assembly, maintenance, storage or use of the RSF650.

This Limited Warranty will be void if the product is ever:
- used in a manner other than for recreation or transportation;
- modified in any way;
- rented.

The manufacturer is not liable for incidental or consequential loss or damage due directly or indirectly to the use of this product.

Razor does not offer an extended warranty. If you have purchased an extended warranty, it must be honored by the store at which it was purchased.

For your records, save your original sales receipt with this manual and write the serial number below.

_____

CUSTOMER SERVICE CONTACT INFORMATION

Need Help? Visit our website for replacement parts, product support, a list of authorized service centers in the US and customer service contact information at **www.razor.com**. Please have the product I.D. code (located on the white label of your product) available for better assistance. Additional Customer Service contact information is listed below:

AMERICAS

Razor USA LLC
P.O. Box 3610
Cerritos, CA 90703
USA

+1 866 467 2967
Monday - Friday
8:00 AM - 5:00 PM Pacific Time
customersupport@razorusa.com

EUROPE, MIDDLE EAST, AFRICA

Razor USA LLC (Europe)
Handelsweg 2
2742 RD Waddinxveen
Netherlands

+44 (0) 120 267 2702
info@razoreu.com

ASIA

Razor USA LLC (Asia)
P.O. Box 3610
Cerritos, CA 90703
USA

+81 50 7579 6622
info@razor-asia.com

UNITED KINGDOM AND IRELAND

Razor USA LLC (UK)
Unit 20
Hartnoll Business Centre
Post Hill, Tiverton
Devon EX16 4NG
UK

+44 (0) 120 267 2702
info@razoreu.com

AUSTRALIA AND NEW ZEALAND

Razor USA LLC
P.O. Box 4280
Auburn South
VIC 3122
Australia

+1 800 954 354 (AU)
+0 800 003 221 (NZ)
info@razoranz.com

IMPORTED IN JAPAN BY B-PLUS ASIA CORP.

THE RIPSTIK COMPANY

Razor USA LLC
Kurokawa 3-1, Asaoku,
Kawasaki, Kanagawa
215-0035
Japan

+81 (0) 44 328 9057 Tel
+81 (0) 44 328 9067 Fax
info@razor-asia.com

Printed in China for Razor USA LLC.

Copyright © 2003-2021 Razor USA, LLC. All rights reserved. Razor® and the Razor logo design are among the registered trademarks of Razor USA LLC in the United States and/or select foreign countries. RSF650™ and the RSF650 logo design are trademarks of Razor USA LLC.