# Winchester® Super X® Pump, 12 and 20 Gauge Pump-Action Shotgun Owner's Manual

Important instructions for the

# Winchester® Super X® Pump Pump-Action Shotgun

Winchester Repeating Arms
Customer Service Department (United States)
275 Winchester Avenue
Morgan, Utah 84050-9333
Phone: (800) 945-5237

If you have any questions or comments regarding your new firearm, please feel free to write or call us. Use the space below to record information about your new firearm.

Model _____

Serial Number _____

Purchased From _____

Date of Purchase _____

Winchester is a registered trademark of Olin Corporation.

A01606/16164

**Contents** **Page**

State Warning . . . . . 1
WARNING: You are Responsible for Firearm Safety . . . . 1
General Description and Operation . . . . . 6
Nomenclature . . . . . 6
Serial Number . . . . . 7
Initial Cleaning and Oiling . . . . . 7
Operation of the “Safety” . . . . . 10
Assembly . . . . . 12
Disassembly . . . . . 13
Ammunition . . . . . 13
Magazine Capacity . . . . . 14
Three-Shot Adaptor (Plug) . . . . . 15
Loading . . . . . 17
Firing . . . . . 18
Unloading . . . . . 19
Interchangeable Choke Tube System . . . . . 20
Extra Barrels . . . . . 23
Sight Adjustment . . . . . 23
Scope Mounting Instructions . . . . . 25
Length of Pull Adjustment . . . . . 27
Comb Height Adjustment . . . . . 28
Cleaning and Maintenance Suggestions . . . . . 29
Parts, Service, Repair and Questions . . . . . 36
Website Information . . . . . 37

## *State Warning*

According to state law, California requires that firearm manufacturers, distributors and retailers include conspicuous, specific warnings with firearms sold in that state.

**⚠WARNING**

"Children are attracted to and can operate firearms that can cause severe injuries or death. Prevent child access by always keeping guns locked away and unloaded when not in use. If you keep a loaded firearm where a child obtains and improperly uses it, you may be fined or sent to prison."

**⚠ ADVERTENCIA**

"A los niños los atraen las armas de fuego y las pueden hacer funcionar. Ellos pueden causarses lesions graves y la muerte. Evite que los niños tengan accesso a las armas de fuego guardándolas siempre con llave y descargadas cuando no las esté utilizando. Si usted tiene un arma de fuego cargada en un lugar en que un niño tiene acceso a ella y la usa indebidamente, le pueden dar una multa o enviarlo a la carcel."

## *Warning: You Are Responsible For Firearm Safety*

**⚠WARNING**

**FAILURE TO FOLLOW ANY OF THE FOLLOWING WARNINGS COULD RESULT IN SERIOUS INJURY OR DEATH.**

As a firearm owner, you accept a set of demanding responsibilities. How seriously you take these responsibilities can be the difference between life and death.

There is no excuse for careless or abusive handling of any firearm. At all times handle this firearm and all other firearms with intense respect for their power and potential danger.

Please read and understand all of the cautions, warnings, notices, proper handling procedures and instructions outlined in this owner's manual before using your new firearm.

1 **ALWAYS KEEP THE MUZZLE OF YOUR FIREARM POINTED IN A SAFE DIRECTION EVEN THOUGH YOU ARE CERTAIN IT IS UNLOADED.**
Never point any firearm at anything you do not intend to shoot. Be extremely alert and aware of all persons and property within the range of your ammunition.

2 **NEVER RELY TOTALLY ON YOUR FIREARM'S MECHANICAL "SAFETY" DEVICE. LIKE ANY MECHANICAL DEVICE, A "SAFETY" CAN SOMETIMES FAIL; IT CAN BE JARRED OR INADVERTENTLY MANIPULATED INTO AN UNSAFE CONDITION.**
The word "safety" describes a firearm's trigger block mechanism, sear block mechanism, hammer block mechanism or firing pin block mechanism. Mechanical "safeties" are designed to place your firearm in a safer status, and no guarantee can be made

that the firearm will not fire even if the "safety" is in the on safe position. Mechanical "safeties" merely aid safe gun handling and are no excuse for pointing your firearm's muzzle in an unsafe direction. See "Operation of the "Safety" on pages 10-11 for instructions on the operation of this firearm's "safety."

Remember, safe gun handling does not stop with your firearm's mechanical "safety" devices, it starts there. Always treat this firearm with the respect due a loaded, ready-to-fire firearm.

Some firearms do not have a mechanical "safety." Many target firearms, lever-action firearms and pistols do not have manual "safety" mechanisms. Therefore it is critical to read and understand the owner's manual for every firearm which explains the safe operation of the firearm.

While it is a good idea to "test" your firearm's mechanical "safety" periodically for proper function, never test the "safety" while your firearm is loaded or pointed in an unsafe direction.

**3 WHENEVER YOU HANDLE ANY FIREARM, OR HAND IT TO SOMEONE, ALWAYS OPEN THE ACTION IMMEDIATELY AND VISUALLY CHECK THE FIREARM'S CHAMBER TO MAKE CERTAIN THAT THE FIREARM IS COMPLETELY UNLOADED.**

Make certain the firearm does not inadvertently contain any ammunition. Remember, merely removing the magazine does not mean the chamber is unloaded. Always keep the chamber empty and the "safety" in the on safe position unless shooting is imminent.

**4 ALWAYS WEAR EAR AND EYE PROTECTION WHEN SHOOTING.**

Unprotected, repeated exposure to gunfire can cause hearing damage. Wear hearing protection (shooting earplugs or muffs) to guard against such damage.

Wear shooting glasses to protect your eyes from flying particles. Allow proper distance (eye relief) between a scope and your eye when firing a scoped pistol, rifle or shotgun. Do not use unorthodox shooting methods that could cause the rearward travel of the slide or bolt of a firearm to contact your eyes, face or hands. Always keep a safe distance between the muzzle of your firearm and any persons nearby, as muzzle blast, debris and ejecting shells could inflict serious injury.

Always wear eye protection when disassembling and cleaning any firearm to prevent the possibility of springs, spring-tensioned parts, solvents or other agents from contacting your eyes.

**5 KEEP ALL FIREARMS UNLOADED DURING TRANSPORT, EVEN WHEN STORED IN A HOLSTER, GUN CASE, SCABBARD OR OTHER CONTAINER.**

**6 DROPPING OR JARRING A LOADED FIREARM CAN CAUSE ACCIDENTAL DISCHARGE.**

This can occur even with the "safety" in the on safe position. Be extremely careful while hunting or during any shooting activity to avoid dropping any firearm.

**7 HUNTING FROM ELEVATED SURFACES SUCH AS TREESTANDS IS DANGEROUS.**

Doing so may increase the risk of mishandling a firearm. The following rules should always be observed by you and those you hunt with. Always make certain that the stand being used is safe and stable. Always make certain that your firearm is unloaded when it is being taken up and down from the stand. Always make certain that your firearm is not dropped from the stand, or dropped while it is being taken up or down from the stand. Remember, a loaded firearm may discharge when dropped, even with the "safety" in the on safe position.

**8 STORE YOUR FIREARM AND AMMUNITION SEPARATELY, WELL BEYOND THE REACH OF CHILDREN.**

Take prudent safeguards to ensure your firearm does not become available to untrained, inexperienced or unwelcome hands. Store all firearms in secure, locked cases or a gun safe. Keep your firearm unloaded when not in use.

**9 BEWARE OF BARREL OBSTRUCTIONS.**

Mud, snow and an infinite variety of other objects may inadvertently lodge in a barrel bore. It only takes a small obstruction to cause dangerously increased pressures that can damage your firearm and cause serious injury to yourself and others.

**BEFORE CHECKING FOR A BARREL OBSTRUCTION, BE CERTAIN YOUR FIREARM IS COMPLETELY UNLOADED, THERE IS NOT A LIVE SHELL IN THE CHAMBER AND THE "SAFETY" IS IN THE ON SAFE POSITION.**

After assuring yourself that the firearm is completely unloaded, open the breech or action and look through the barrel to be sure it is clear of obstructions. If an obstruction is seen, no matter how small it may be, clean the bore with a cleaning rod and patch as described on pages 29-31 of this owner's manual.

**10 BE ALERT TO THE SIGNS OF AMMUNITION MALFUNCTION. IF YOU DETECT AN OFF SOUND OR LIGHT RECOIL WHEN A CARTRIDGE OR SHELL IS FIRED, DO NOT LOAD ANOTHER CARTRIDGE OR SHELL INTO THE CHAMBER.**

If your firearm fails to fire, keep the muzzle pointed in a safe direction for a minimum of 30 seconds. Rotate the ejection area of the firearm away from you, carefully open the action and remove the cartridge or shell from the chamber. If the primer is indented, the defective cartridge or shell should be disposed of in a way that cannot cause harm. If the primer is not indented, your firearm should be examined by a qualified gunsmith and the cause of the malfunction corrected before further use. Glance down the barrel

to make sure that no obstructions remain in the barrel. Completely clear the barrel before loading and firing again. Failure to follow these instructions can cause extensive damage to your firearm and possible serious injury to yourself and others.

**11 NEVER INSERT A SHELL OF THE INCORRECT GAUGE INTO ANY FIREARM.**
The gauge of your firearm is marked on the barrel. Store all shells of different gauges in completely separate and well-marked containers. Never store shells of mixed gauges in a common container or in your pockets. See pages 13-14 for more information on the correct ammunition for your firearm.

**12 EXAMINE EVERY SHELL YOU PUT IN YOUR FIREARM.**
We assume no responsibility for the use of unsafe or improper firearm and ammunition combinations or damage or injury caused by damaged ammunition. It is your responsibility to read and heed all warnings in this owner's manual and on ammunition boxes. See pages 13-14 for more information on the correct ammunition for your firearm.

**13 USE ONLY SAAMI APPROVED AMMUNITION.**
The barrel and action of this firearm have been made with substantial safety margins beyond the pressures developed by established American commercial loads. Nevertheless, we can assume no liability for incidents which occur through the use of shells of nonstandard dimensions or which develop pressures in excess of commercially available ammunition which have been loaded in accordance with standards established by the Sporting Arms and Ammunition Manufacturers' Institute (SAAMI).

**14 MAKE SURE OF ADEQUATE VENTILATION IN THE AREA THAT YOU DISCHARGE A FIREARM. LEAD EXPOSURE CAN OCCUR FROM DISCHARGING FIREARMS IN POORLY VENTILATED AREAS, CLEANING FIREARMS OR HANDLING AMMUNITION.**
Lead is a substance that has been known to cause birth defects, reproductive harm and other serious injury. Wash hands thoroughly after exposure to ammunition or after cleaning a firearm.

**15 DO NOT SNAP THE FIRING PIN ON AN EMPTY CHAMBER; THE CHAMBER MAY NOT BE EMPTY!**
Treat every firearm with the respect due a loaded firearm, even though you are certain the firearm is unloaded.

**16 KEEP YOUR FINGERS AWAY FROM THE TRIGGER WHILE LOADING AND UNLOADING UNTIL SHOOTING IS IMMINENT.**

**17 BE SURE OF YOUR TARGET AND BACKSTOP, PARTICULARLY DURING LOW LIGHT PERIODS.**
Know the range of your ammunition. Never shoot at water or hard objects.

**18 ALWAYS UNLOAD YOUR FIREARM'S CHAMBER BEFORE CROSSING A FENCE, CLIMBING A TREE, JUMPING A DITCH OR NEGOTIATING OTHER OBSTACLES.**
Never place your firearm on or against a fence, tree, car or other similar object.

**19 BE DEFENSIVE AND ON GUARD AGAINST UNSAFE GUN HANDLING AROUND YOU AND OTHERS.**
Don't be timid when it comes to firearm safety. If you observe other shooters violating any of these safety precautions, politely suggest safer handling practices.

**20 BE CERTAIN YOUR FIREARM IS UNLOADED BEFORE CLEANING.**
Because so many firearm accidents occur when a firearm is being cleaned, special and extreme care should be taken to be sure your firearm is unloaded before disassembly, cleaning and reassembly.

Keep ammunition away from the cleaning location. Never test the mechanical function of any firearm with live ammunition.

**21 TEACH AND SUPERVISE FIREARMS SAFETY TO ALL MEMBERS OF YOUR FAMILY, ESPECIALLY TO CHILDREN AND NON-SHOOTERS.**
Closely supervise newcomers to the shooting sports. Encourage enrollment in hunting and shooting safety courses.

**22 NEVER DRINK ALCOHOLIC BEVERAGES OR TAKE ANY TYPE OF DRUGS BEFORE OR DURING SHOOTING.**
Your vision, motor skills and judgment could be dangerously impaired, making your gun handling unsafe to you and to others.

**23 READ AND HEED ALL WARNINGS IN THIS OWNER'S MANUAL, ON AMMUNITION BOXES AND WITH ALL ACCESSORIES THAT YOU INSTALL ON YOUR FIREARM.**
It is your responsibility to secure the most up-to-date information on the safe handling procedures of your Winchester firearm. We assume no liability for incidents which occur when unsafe or improper firearm accessories or ammunition combinations are used.

**24 PRACTICE PERIODIC MAINTENANCE, AVOID UNAUTHORIZED SERVICING.**
Your firearm is a mechanical device which will not last forever, and as such, is subject to wear and requires periodic inspection, adjustment and service. Winchester firearms should be serviced by a Winchester Repeating Arms Authorized Repair Center or by our Service Facility in Arnold, Missouri. We assume no responsibility for injuries suffered or caused by unauthorized servicing, alterations or modifications of Winchester firearms.

**25 WE RESERVE THE RIGHT TO REFUSE SERVICE ON FIREARMS THAT HAVE BEEN ALTERED, ADDED TO OR SUBSTANTIALLY CHANGED.**

Removal of metal from the barrel, or modifications of the firing mechanism and/or operating parts, may lead to a refusal of service on such firearms. We will charge you for parts and labor to return the firearm to original specifications.

**DO NOT, UNDER ANY CIRCUMSTANCES, ALTER THE TRIGGER, "SAFETY" OR OTHER PARTS OF THE FIRING MECHANISM OF THIS OR ANY OTHER FIREARM. FAILURE TO OBEY THIS WARNING MAY RESULT IN INJURY OR DEATH TO YOURSELF OR OTHERS.**

## BE CAREFUL!

## General Description and Operation

### General Description

No pump shotgun is faster than the Winchester® Super X® Pump. Inertia from recoil assists the slide rearward, making it much easier to begin the pumping motion. You'll find that you will complete the pumping action forward quickly and in an instant you've cycled a shell and are ready for a second shot. Speed like this makes a big difference, allowing you to set up for a follow-up shot more quickly and concentrate on your target, not just on pumping the shotgun.

With the Super X Pump's rotary bolt design, the lugs engage directly in the recesses in the barrel extension. This is a strong, consistent and reliable lockup design. Every design feature of the Super X Pump works together to make what many consider the most reliable pump shotgun on the market today.

This owner's manual covers all 12 and 20 gauge Super X Pump shotguns.

### General Operation

The Super X Pump is a pump-action shotgun that allows you to load a shell by cycling the action to eject the empty shell, and move an unfired shell from the loaded magazine tube to the chamber. This can be repeated until the magazine is empty. A single shell can also be inserted into the chamber manually.

Prior to using live ammunition, familiarize yourself thoroughly with the operating instructions in this owner's manual. Get accustomed to the feel of your new firearm and know the forces required to operate the action. Learn how to pull the trigger and, above all, know the location and operation of the "safety." Procedures for disassembly and operation of various components are outlined later in this owner's manual. Please read and study them thoroughly.

## Nomenclature

In conventional firearm terminology the position and movement of firearm parts are described as they occur

*FIGURE 1*

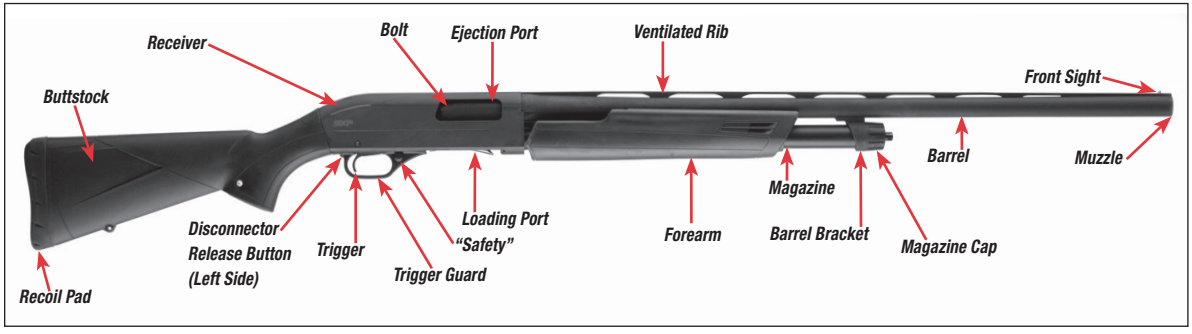


with the firearm horizontal and in the normal firing position: i.e., the muzzle is forward or in front; the buttstock is rearward or to the rear; the trigger is downward or underneath; the rib is upward or on top. For general parts nomenclature, refer to Figure 1 above.

The Super X Pump is also shown disassembled to the extent necessary in order to follow the instructions contained in this owner's manual (Figure 19, page 32). Figure 2, on pages 8 and 9, covers the general features and benefits of the Super X Pump design.

Throughout this owner's manual the "action" refers to the mechanism of this shotgun which loads and secures the shells in the chamber.

## Serial Number

The serial number is located on the left side of the receiver, just above the trigger guard. Record the serial number at the front of this book for future reference.

## Initial Cleaning and Oiling

**NOTICE**

**PLEASE TAKE NOTE OF THE FOLLOWING INFORMATION BEFORE CLEANING YOUR FIREARM.**

### Cleaning Parts With Special Finishes

Be especially careful when cleaning firearms with camouflage, Dura-Touch® Armor Coating and other special finishes. Always prevent these surfaces from coming in contact with cleaning solvents, barrel scrubbers



(Continued on page 10.)

*FIGURE 2*

SHOTGUN FEATURES

*Most Super X® Pump hunting models are fitted with the Invector-Plus™ interchangeable choke system. It allows you to change choke constriction to the demands of the game being hunted or your shooting situation. You can easily change the pattern size and density by simply switching choke tubes. A variety of accessory choke tubes are available.*

*Faster pump-action. Inertia assists you as you pump the forearm rearward to load for the next shot.*

and other strong chemicals. It is preferable to clean these surfaces with a light gun oil containing no solvents or with a damp cloth and mild dish soap (be sure to keep water out of the action). When cleaning your firearm's bore and action, protect the external finishes from any contact with chemicals used. Also, avoid any contact between external finishes and other strong chemicals like those found in DEET-containing insect repellents, sunscreens, etc. Damage to camouflage, Dura-Touch and other finishes caused by chemicals is irreversible and not repairable.

**⚠WARNING**

**WEAR EYE PROTECTION WHEN ASSEMBLING AND DISASSEMBLING YOUR SHOTGUN TO PREVENT SPRINGS, SPRING-LOADED PARTS, SOLVENTS OR OTHER AGENTS FROM CONTACTING YOUR EYES, RESULTING IN INJURY.**

Some metal parts of your new Super X® Pump have been coated at the factory with a rust preventative compound. Before using your Super X Pump, clean the anti-rust compound from the inside of the barrel, receiver, bolt mechanism and the action/chamber areas. A high quality, lightweight gun oil should be used to remove this compound and to give your new firearm its first lubrication. Clean the barrel using a cleaning rod and patch as explained under "Cleaning and Maintenance Suggestions" found on pages 29-31 in this owner's manual.

Before beginning assembly of your Super X Pump you should first wipe the mechanism clean and apply a few drops of quality oil on the indicated surfaces (Figure 3, page 10).

***FIGURE 3***

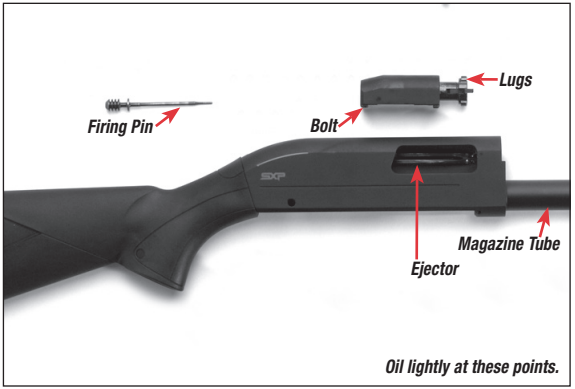


Avoid applying too much oil. Only a light film is necessary. Excessive oil should be wiped off, especially in cold weather.

## OPERATION OF THE "SAFETY"

**⚠WARNING**

**ALWAYS KEEP THE "SAFETY" IN THE ON SAFE POSITION UNLESS SHOOTING IS IMMINENT. ALWAYS KEEP THE MUZZLE POINTED IN A SAFE DIRECTION. FAILURE TO FOLLOW THESE WARNINGS COULD RESULT IN SERIOUS INJURY OR DEATH.**

*FIGURE 4*

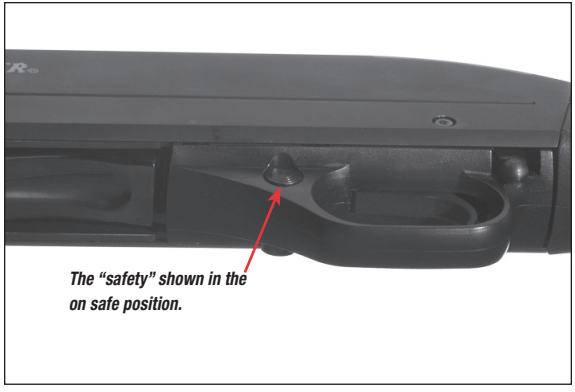

*The "safety" shown in the on safe position.*

*FIGURE 5*

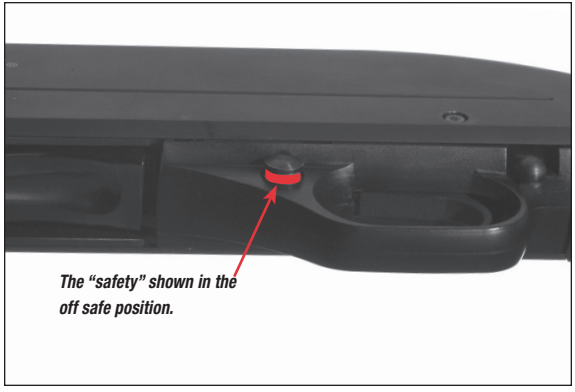

*The "safety" shown in the off safe position.*

The cross bolt "safety" is designed to prevent the trigger from being pulled when in the on safe position. The "safety" is located at the front of the trigger guard. In the off safe position, a red warning band is visible on the "safety" button on the left side of the trigger guard. It is essential that you become very familiar with the feel, look and operation of the "safety" on this shotgun before attempting to load and shoot.

To place the firearm on safe, press the "safety" button to the right (Figure 4, page 11). To move the "safety" to the off safe or fire position, press the "safety" button to the left. This exposes the red warning band on the "safety" button (Figure 5, page 11).

With the "safety" in the on safe position the trigger and hammer are blocked and the shotgun cannot be fired. In the off safe position, if your firearm is loaded with a shell in the chamber, the chambered shell can be fired by simply pulling the trigger.

**⚠WARNING**

**DO NOT DEPEND ON THE RED COLOR ALONE TO INDICATE YOUR FIREARM'S "SAFETY" STATUS. TIME, EXPOSURE TO THE ELEMENTS, AND THE ABRASIVE ACTION OF CLEANING AGENTS CAN ERASE IT. FAILURE TO FOLLOW THIS WARNING COULD RESULT IN SERIOUS INJURY OR DEATH.**

## ASSEMBLY

**⚠WARNING**

**ALWAYS KEEP THE MUZZLE POINTED IN A SAFE DIRECTION. BEFORE STARTING ASSEMBLY PROCEDURES, VISUALLY INSPECT THE CHAMBER TO BE ABSOLUTELY CERTAIN THE FIREARM IS COMPLETELY UNLOADED. PLACE THE "SAFETY" IN THE ON SAFE POSITION. FAILURE TO FOLLOW THIS WARNING COULD RESULT IN SERIOUS INJURY OR DEATH.**

**⚠WARNING**

**WEAR EYE PROTECTION WHEN DISASSEMBLING AND ASSEMBLING YOUR SHOTGUN TO PREVENT SPRINGS, SPRING-LOADED PARTS, SOLVENTS OR OTHER AGENTS FROM CONTACTING YOUR EYES, RESULTING IN INJURY.**

The Super X® Pump shotgun is delivered in the box with the barrel removed and the forearm attached to the magazine tube.

1. Remove the barrel and receiver/stock section from the box and clean and oil them as explained on page 10.
2. Unscrew the magazine cap from the magazine tube.
3. Your shotgun will usually come out of the box with the bolt assembly in the closed position (forward), with the trigger assembly already in place in the receiver. The barrel can be installed with the action closed, but it is easier if the action has been opened slightly.

***FIGURE 6***

4. Unlock and open the action by pushing up on the disconnector release button at the rear of the trigger guard (Figure 6, page 12) on the left side and pull back on the forearm.
5. Grasp the barrel ahead of the barrel bracket.
6. Position the barrel over and in line with the magazine tube.
7. Slide the barrel rearward.
8. Guide the barrel bracket over the magazine tube and guide the barrel extension into the receiver. Be sure that the slot in the barrel aligns with the ejector.
9. Slide the barrel rearward until it seats in the receiver.

10. Immediately replace the magazine cap. Tighten it hand-tight (at least three full turns) to ensure secure engagement.

## *Disassembly*

**⚠WARNING**

**ALWAYS KEEP THE MUZZLE POINTED IN A SAFE DIRECTION. BEFORE STARTING DISASSEMBLY PROCEDURES, OPEN THE ACTION AND VISUALLY INSPECT THE CHAMBER TO BE ABSOLUTELY CERTAIN THE FIREARM IS COMPLETELY UNLOADED. PLACE THE "SAFETY" IN THE ON SAFE POSITION. FAILURE TO FOLLOW THIS WARNING COULD RESULT IN SERIOUS INJURY OR DEATH.**

1. Depress the disconnector release button, found behind the trigger guard on the left side (Figure 6, page 12) to unlock the action without releasing the hammer.
2. Open the action and place the "safety" in the on safe position. (The red warning band must not be visible.)
3. With the magazine pointed in a safe direction, unscrew and remove the magazine cap.

**⚠WARNING**

**WEAR EYE PROTECTION WHEN DISASSEMBLING AND CLEANING YOUR SHOTGUN TO PREVENT SPRINGS, SPRING-LOADED PARTS, SOLVENTS OR OTHER AGENTS FROM CONTACTING YOUR EYES, RESULTING IN INJURY.**

4. With one hand, grasp the barrel ahead of the barrel bracket, hold the buttstock with your other hand.
5. Pull the barrel forward to disengage it from the receiver. Slide the barrel bracket off the magazine. Do not use excessive force.
6. Immediately replace the magazine cap and hand tighten at least three turns.

## *Ammunition*

**⚠WARNING**

**USE ONLY SHELLS OF THE CORRECT GAUGE AND LENGTH. THE GAUGE AND LENGTH OF THE CHAMBER IS INSCRIBED ON THE SIDE OF THE BARREL. DO NOT USE AMMUNITION OTHER THAN WHAT IS INSCRIBED ON THE SIDE OF THE BARREL. EXAMINE EVERY SHELL YOU PUT IN YOUR SHOTGUN. FAILURE TO FOLLOW THIS WARNING COULD RESULT IN SERIOUS INJURY OR DEATH AND CAUSE DAMAGE TO YOUR SHOTGUN.**

**USE SHELLS OF THE CORRECT LENGTH. DO NOT USE 3" OR 3½" SHELLS IN A BARREL WITH A 2¾" OR 2½" CHAMBER, OR 3½" SHELLS IN A BARREL WITH A 3" CHAMBER. DOING SO CAN RESULT IN A BUILDUP OF DANGEROUSLY HIGH PRESSURES. FAILURE TO FOLLOW THIS WARNING COULD RESULT IN SERIOUS INJURY OR DEATH AND CAUSE DAMAGE TO YOUR SHOTGUN.**

**DO NOT PUT A 20 GAUGE SHELL IN A 12 GAUGE SHOTGUN. DO NOT PUT A 28 GAUGE SHELL IN A 20 GAUGE SHOTGUN. DO NOT PUT A .410 BORE SHELL IN A 28 GAUGE SHOTGUN. NEVER PUT METALLIC CARTRIDGES OF ANY KIND IN A SHOTGUN. SPECIFICALLY, NEVER PUT CENTERFIRE RIFLE OR PISTOL CARTRIDGES IN A SHOTGUN CHAMBERED FOR .410 BORE. FAILURE TO FOLLOW THESE WARNINGS COULD RESULT IN SERIOUS INJURY OR DEATH AND CAUSE DAMAGE TO YOUR SHOTGUN.**

The most certain way to bulge or rupture a shotgun barrel is to load a smaller gauge shell into a larger gauge chamber. The smaller gauge shell will not fall completely through the barrel; its rim is caught by the front of a larger gauge chamber or at the larger gauge's choke. Your shotgun will misfire (with the chamber appearing to be empty). It is then possible to load the correct gauge shell behind the smaller gauge shell. If the shotgun is then fired, the result will be a so-called "12-20, 20-28 or 28-.410 burst" which can cause extensive damage to your shotgun and possible serious injury to you and others.

We can assume no responsibility for incidents which occur through the use of shells of nonstandard dimension or those developing pressures in excess of SAAMI (Sporting Arms and Ammunition Manufacturers' Institute) established standards.

There are two basic versions of this shotgun. This information can be found inscribed on the barrel. The barrel can safely shoot both lead and steel shot. Special rifled choke tubes and rifled barrels are designed for shooting sabot-type slugs. Winchester ammunition is always an excellent choice for your shotgun, delivering unmatched performance and dependability.

- 12 gauge, 3½" chamber — These models have a 3½" chamber designed to shoot factory 12 gauge loads including 2¾", 3" and 3½" field loads.
- 12 gauge, 3" chamber — These models have a 3" chamber designed to shoot factory 12 gauge loads including 2¾" and 3" field loads.
- 20 gauge, 3" chamber models will shoot all factory lead and steel 20 gauge, 2¾" and 3" field loads.

## *Magazine Capacity*

With the magazine three-shot adaptor (plug) removed, Super X® Pump 3" shotguns will hold four 2¾" or three 3" shells in the magazine. Super X Pump 3½" shotguns will hold four 2¾" shells, four 3" shells or three 3½" shells in the magazine. With the magazine three-shot adaptor (plug) installed magazine capacity is limited to two shells in the magazine.

Remember, "total" capacity includes an additional shell in the chamber in addition to a full magazine.

It is extremely important that you know the magazine capacity of your shotgun. Under appropriate circumstances, at a range or other suitable shooting location, load your magazine to full capacity and make note of the number of shells.

## *Three-Shot Adaptor (Plug)*

**⚠WARNING**

**ALWAYS KEEP THE MUZZLE POINTED IN A SAFE DIRECTION. BEFORE REMOVING OR INSTALLING THE THREE-SHOT ADAPTOR, COMPLETELY UNLOAD THE SHOTGUN. OPEN THE ACTION AND VISUALLY INSPECT THE CHAMBER, FEED MECHANISM AND MAGAZINE TO BE ABSOLUTELY CERTAIN THE FIREARM IS COMPLETELY UNLOADED. PLACE THE "SAFETY" IN THE ON SAFE POSITION. FAILURE TO FOLLOW THIS WARNING COULD RESULT IN SERIOUS INJURY OR DEATH.**

**WEAR EYE PROTECTION WHEN REMOVING OR INSTALLING THE THREE-SHOT ADAPTOR TO PREVENT SPRINGS, SPRING-LOADED PARTS, SOLVENTS OR OTHER AGENTS FROM CONTACTING YOUR EYES, RESULTING IN INJURY.**

The Super X® Pump shotgun is delivered with the magazine three-shot adaptor (plug) installed in the magazine, limiting magazine capacity to two shells in compliance with federal migratory bird regulations. If you do not wish to be limited to three shots when it is not required by law, you can remove the three-shot adaptor.

### *Removing the Three-Shot Adaptor (Plug)*

1. Unscrew the magazine cap and remove it.

***FIGURE 7***

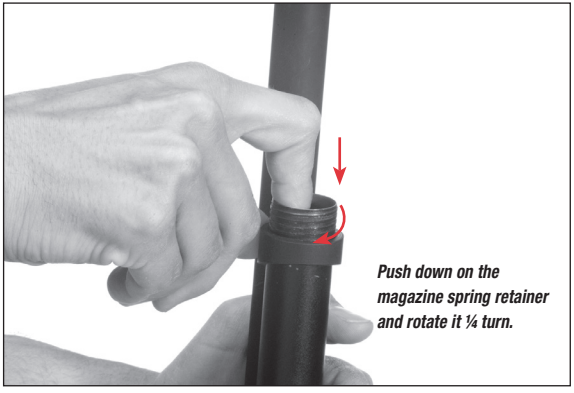


2. The magazine three-shot adaptor is located underneath the magazine spring retainer and is under pressure from the magazine spring. Using your index finger or a large blade-type screwdriver, press the magazine spring retainer into the magazine approximately 1" and rotate it ¼ turn (Figure 7, page 15).
3. The magazine spring retainer is under pressure from the magazine spring. Keep the magazine spring under control and carefully remove the magazine spring retainer (Figure 8, page 16). Remove the magazine three-shot adaptor (plug) and replace the magazine spring retainer.

**FIGURE 8**

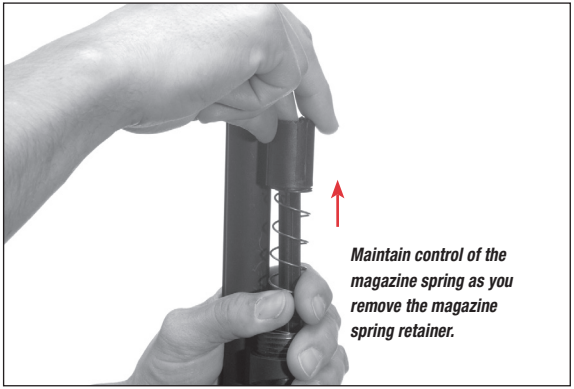


4. Align the full-length grooves in the magazine spring retainer with the protrusions inside the magazine tube.
5. Compress the magazine spring back into the magazine tube.
6. Replace the magazine spring retainer by pushing it into the magazine tube approximately 1" and rotating it ¼ turn to lock it in place. Make sure the magazine spring retainer is locked into place.
7. Install the magazine cap.

### *Installing the Three-Shot Adaptor (Plug)*

If you need to install the magazine three-shot adaptor (plug) to limit your shotgun magazine to two shells again perform the following operation:

1. Unscrew the magazine cap and remove it.
2. Using your index finger or a large blade-type screwdriver, press the magazine spring retainer into the magazine approximately 1" and rotate it ¼ turn (Figure 7, page 15).
3. The magazine spring retainer is under pressure from the magazine spring, keep the magazine spring under control and carefully remove the retainer. Place the magazine three-shot adaptor (plug) on top of the magazine spring and replace the magazine spring retainer.
4. Align the full-length grooves in the magazine spring retainer with the protrusions inside the magazine tube, found at the three and nine o'clock positions.
5. Compress the magazine spring and magazine three-shot adaptor back into the magazine tube.
6. Replace the magazine spring retainer by pushing it into the magazine tube approximately 1" and rotating it ¼ turn to lock it in place. Make sure the magazine spring retainer is locked in place.
7. Install the magazine cap.

## LOADING

**⚠WARNING**

**WHEN LOADING YOUR SHOTGUN ALWAYS KEEP THE MUZZLE POINTED IN A SAFE DIRECTION, ALWAYS PLACE THE "SAFETY" IN THE ON SAFE POSITION AND KEEP YOUR FINGERS AWAY FROM THE TRIGGER. FAILURE TO FOLLOW THESE WARNINGS COULD RESULT IN SERIOUS INJURY OR DEATH.**

**TO AVOID ACCIDENTAL DISCHARGE, DO NOT CARRY YOUR SHOTGUN WITH A SHELL IN THE CHAMBER. WHEN FIRING IS NO LONGER IMMINENT, MAKE SURE THE "SAFETY" IS IN THE ON SAFE POSITION AND UNLOAD THE CHAMBER. FAILURE TO FOLLOW THESE WARNINGS COULD RESULT IN SERIOUS INJURY OR DEATH.**

### *LOADING THE MAGAZINE*

1. Place the "safety" in the on safe position and close the action.
2. Depress the shell carrier in the loading port with the front of the shell (Figure 9, page 17).
3. With your thumb on the base of the shell, push the shell into the magazine until it is retained by the shell stop.
4. Repeat the procedure until the magazine is fully loaded.

***FIGURE 9***

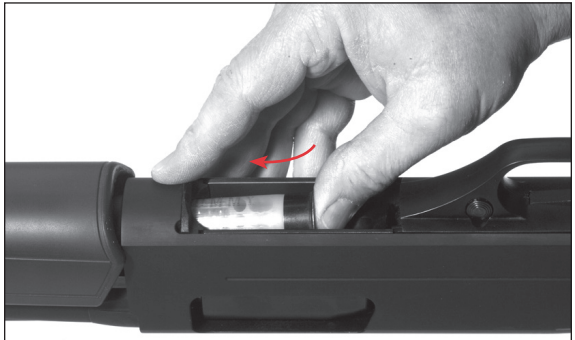

***Position the shell fully forward in the magazine.***

### *LOADING THE CHAMBER FROM THE MAGAZINE*

1. With the bolt closed, depress the carrier with the front of the shell and, using your thumb, push the shell into the magazine until the shell is held in place by the shell stop.
2. If desired, continue to load the magazine, as explained above, to full capacity.
3. If firing is imminent, a shell can now be moved from the magazine to the chamber by depressing the disconnector release button found behind the trigger guard on the left side and cycling the forearm. A shell will be fed automatically from the magazine to the chamber as the bolt closes. Another shell can then be inserted into the magazine to load to full capacity.

**⚠WARNING**

**THE SHOTGUN IS NOW READY TO FIRE BY SIMPLY MOVING THE "SAFETY" TO THE OFF SAFE POSITION AND PULLING THE TRIGGER.**

### *Loading the Chamber Through the Ejection Port*

1. Depress the disconnector release button found behind the trigger guard on the left side. This unlocks the action without releasing the hammer. Slide the forearm completely rearward. Visually inspect the chamber, feed mechanism and magazine to make sure they are clear of any obstructions.
2. Insert a shell of the proper gauge and length through the ejection port into the open breech.
3. Slide the forearm completely forward.
4. If desired, load the magazine as previously explained to full capacity.

**⚠WARNING**

**THE SHOTGUN IS NOW READY TO FIRE BY SIMPLY MOVING THE "SAFETY" TO THE OFF SAFE POSITION AND PULLING THE TRIGGER.**

## *Firing*

**⚠WARNING**

**NEVER LOAD A SHELL INTO THE CHAMBER OR PLACE THE "SAFETY" IN THE OFF SAFE POSITION UNLESS SHOOTING IS IMMINENT. ALWAYS KEEP THE MUZZLE POINTED IN A SAFE DIRECTION. FAILURE TO FOLLOW THESE WARNINGS COULD RESULT IN SERIOUS INJURY OR DEATH.**

1. Place the "safety" in the on safe position.
2 Load a shell into the chamber as explained previously.
3. With a shell in the chamber, you need only move the "safety" to the off safe position to fire the shotgun.
4. When ready to fire, move the "safety" into the off safe position, take aim and squeeze the trigger.
5. If you wish to continue firing, pull the forearm completely rearward until the slide stops at the back of the stroke.
6. Push the forearm completely forward, transferring a new shell from the magazine into the chamber. Your Super X® Pump is again ready to fire. Immediately put the "safety" in the on safe position (with the red warning band hidden) until you are ready to fire again.

**⚠WARNING**

**AFTER FIRING, OR WHEN SHOOTING IS NO LONGER IMMINENT, IMMEDIATELY PLACE THE "SAFETY" IN THE ON SAFE POSITION. FAILURE TO FOLLOW THESE WARNINGS COULD RESULT IN SERIOUS INJURY OR DEATH.**

**EVEN WITH THE BOLT LOCKED OPEN AFTER SHOOTING, DO NOT ASSUME THE SHOTGUN IS UNLOADED. ALWAYS INSPECT THE CHAMBER, BARREL, FEED MECHANISM AND MAGAZINE TO BE CERTAIN THE SHOTGUN IS COMPLETELY UNLOADED. FAILURE TO FOLLOW THESE WARNINGS COULD RESULT IN SERIOUS INJURY OR DEATH.**

## *Unloading*

**⚠WARNING**

**WHEN UNLOADING YOUR SHOTGUN ALWAYS PLACE THE "SAFETY" IN THE ON SAFE POSITION. KEEP THE MUZZLE POINTED IN A SAFE DIRECTION AND YOUR FINGERS AWAY FROM THE TRIGGER. FAILURE TO FOLLOW THESE WARNINGS COULD RESULT IN SERIOUS INJURY OR DEATH.**

**ALWAYS INSPECT THE CHAMBER, BARREL, FEED MECHANISM AND MAGAZINE CAREFULLY AFTER UNLOADING TO BE SURE ALL LIVE SHELLS ARE CLEARED FROM THE FIREARM.**

### *Unloading by Cycling the Action*

Perform the following steps to remove shells from the chamber and magazine on all Super X® Pump models.

1. Place the "safety" in the on safe position.
2. Press the disconnector release button to release the slide (Figure 6, page 12).
3. Slide the forearm through a complete cycle of the action and repeat the process until all the shells in the magazine have been transferred to the chamber and then ejected.
4. When the last shell in the magazine has been cycled through the chamber and out the ejection port, leave the action open.
5. Using your index finger, feel the entry of the magazine to make sure there are no longer any shells in the magazine.

### *Unloading from the Magazine*

The shells can also be removed from the magazine by following these steps:

1. Place the "safety" in the on safe position, make sure the action is closed and keep the muzzle pointing in a safe direction.
2. Turn the firearm over so the trigger guard is facing up, then push the carrier down as far as it will go.

*FIGURE 10*

3. When a shell is in the magazine the shell stop rests on the brass of the shell. Push inward on the shell stop, located on the inside-right of the ejection port, to release a shell from the magazine (Figure 10, page 20). Press the shell stop again to release the next shell.
4. With the "safety" still in the on safe position, return the firearm to the normal firing position. Press the disconnector release button and move the forearm all the way rearward to remove the shell from the chamber.

## INTERCHANGEABLE CHOKE TUBE SYSTEM

**⚠WARNING**

**NEVER ATTEMPT TO REMOVE OR INSTALL A CHOKE TUBE IN A LOADED FIREARM. WHENEVER REMOVING OR INSTALLING A CHOKE TUBE IN A SHOTGUN ALWAYS KEEP THE MUZZLE POINTED IN A SAFE DIRECTION. OPEN THE ACTION AND MAKE ABSOLUTELY CERTAIN THE SHOTGUN IS COMPLETELY UNLOADED, ALWAYS PLACE THE "SAFETY" IN THE ON SAFE POSITION AND KEEP YOUR FINGERS AWAY FROM THE TRIGGER. FAILURE TO FOLLOW THESE WARNINGS COULD RESULT IN SERIOUS INJURY OR DEATH.**

**⚠CAUTION**

**INVECTOR-PLUS, STANDARD INVECTOR AND WINCHOKE CHOKE TUBES ARE NOT INTERCHANGEABLE. DO NOT USE INVECTOR-PLUS, STANDARD INVECTOR OR WINCHOKE CHOKE TUBES IN ANY SHOTGUN BARREL NOT SUPPLIED BY WINCHESTER REPEATING ARMS. DO NOT USE ANY OTHER CHOKING DEVICE IN ANY SHOTGUN BARREL SUPPLIED BY WINCHESTER REPEATING ARMS.**

**USE ONLY THE APPROPRIATE GAUGE AND TYPE OF CHOKE TUBE, MARKED INVECTOR-PLUS, STANDARD INVECTOR OR WINCHOKE, IN THIS SHOTGUN. DO NOT FIRE THIS SHOTGUN WITHOUT THE CORRECT CHOKE TUBE INSTALLED. DAMAGE MAY RESULT TO THE THREADS INSIDE THE BARREL.**

**FAILURE TO FOLLOW THIS INFORMATION COULD RESULT IN DAMAGE TO YOUR SHOTGUN OR POSSIBLE INJURY.**

**NOTICE**

**USE ONLY THE CHOKE TUBE WRENCH SUPPLIED WITH YOUR SHOTGUN TO INSTALL AND REMOVE CHOKE TUBES. USING ANY OTHER WRENCH MAY DAMAGE THE THREADS IN THE BARREL.**

All Super X® Pump shotgun barrels are threaded to accept the Invector-Plus™ choke system. Standard Invector, WinChoke and Invector-Plus tubes are not interchangeable. Confirm the choke system of your shotgun by looking on the right side of the barrel where the specifications are inscribed, where the choke markings are normally located.

The constriction of each choke tube is indicated twice on the choke tube: On the side of the tube, and indicated with a "notch" code on the top rim of the tube. The included choke tube wrench is used to remove and install choke tubes.

Some target shotguns include premium extended choke tubes. The constriction of premium choke tubes is indicated twice on the choke tube: On the side of the tube, and indicated with an abbreviation in the colored band. The constriction of flush fit choke tubes is indicated twice on the choke tube: On the side of the tube, and indicated with a "notch" code on the top rim of the tube. The included choke tube is used to remove and install extended choke tubes.

Choke tubes are compatible with factory ammunition that has been loaded in compliance with SAAMI specifications, including magnum lead and steel shot loads, sabots and shotgun slug loads.

Replacement and additional tubes and wrenches are available from your Winchester Repeating Arms dealer, or by contacting the Winchester Repeating Arms Customer Service Department. See page 37 for contact information.

### *Choke Tube Selection*

To help you choose the correct choke tube for each hunting and shooting situation, all Invector-Plus choke tubes are inscribed on the side with the patterns they produce with both lead and steel shot. Each Invector-Plus tube also has notches in the top rim of the tube (Figure 11, page 22). These notches are a code to allow you to determine the choke designation while the tube is installed. Rim notches refer specifically to lead shot. Use the chart on page 22 to cross-reference from lead to steel, and determine the appropriate tubes for your ammunition and hunting/shooting situation.

Several choke tubes are supplied with your shotgun. The choke tubes listed are also available as accessories. Remember, WinChoke, Standard Invector and Invector-Plus tubes are not interchangeable. Before removing or installing tubes, or reading the rim notch code, make sure your shotgun is completely unloaded and the "safety" is in the on safe position.

*FIGURE 11*

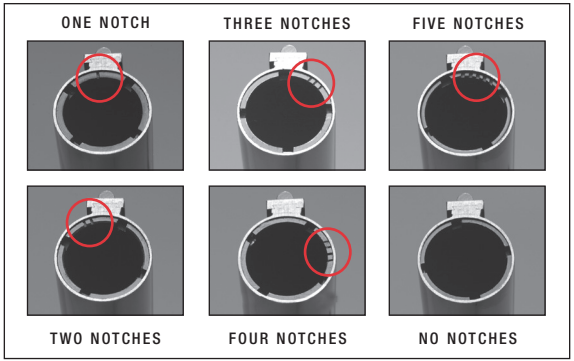


| RIM NOTCHES | PATTERN WITH LEAD SHOT | PATTERN WITH STEEL SHOT |
|---|---|---|
| EXTENDED** | X-FULL TURKEY | ** |
| I | FULL | * |
| II | IMP. MODIFIED | FULL[1] |
| III | MODIFIED | FULL[1] |
| IIII | IMP. CYLINDER | MODIFIED |
| IIIII | SKEET | IMP. CYLINDER |
| NO NOTCHES | CYLINDER | CYLINDER |

* Not for use with steel shot. Using an over-tight choke constriction with steel shot will result in an ineffective "blown" pattern.

** Extra Full Turkey, extended with ports. Do not use with steel shot.

[1] When more than one choke tube is listed for a given steel shot pattern, use the more open choke listed for high velocity, larger shot size steel loads.

### Choke Tube Removal

1. Place the "safety" in the on safe position. Always make sure the shotgun is completely unloaded. Always keep the muzzles pointed in a safe direction.
2. Use the choke tube wrench to loosen the tube, turning it counterclockwise. Finger-twist the tube the rest of the way out of the barrel.

### Choke Tube Installation

1. Place the "safety" in the on safe position. Always make sure the shotgun is completely unloaded. Always keep the muzzles pointed in a safe direction.
2. Before installing a tube, check the internal choke tube threads in the muzzle, as well as the threads on the choke tube to be sure they are clean. Lightly oil the threads with a high-quality, lightweight gun oil.

**NOTICE**

**FAILURE TO CLEAN AND OIL THE THREADS ON THE CHOKE TUBE COULD RESULT IN THE CHOKE TUBE SEIZING IN THE BARREL.**

3. Using your fingers, screw the appropriate tube into the muzzle of the barrel, tapered end first, notched end outward. When it becomes finger-tight, use the included choke tube wrench to firmly seat the tube.

**NOTICE**

**THE CHOKE TUBES SHOULD BE PERIODICALLY CHECKED TO ASSURE THEY ARE TIGHT AND FIRMLY SEATED. BEFORE CHECKING, FOLLOW ALL CHOKE TUBE REMOVAL AND INSTALLATION "SAFETY" GUIDELINES PREVIOUSLY OUTLINED.**

## *Extra Barrels*

**⚠WARNING**

**BEFORE INSTALLING ACCESSORY BARRELS ON YOUR SHOTGUN, READ THE FOLLOWING GUIDELINES TO ENSURE THE BARREL/SHOTGUN COMBINATION IS SAFE. PLACE THE "SAFETY" IN THE ON SAFE POSITION. OPEN THE ACTION AND MAKE CERTAIN YOUR SHOTGUN IS COMPLETELY UNLOADED. KEEP THE MUZZLE POINTED IN A SAFE DIRECTION. FAILURE TO FOLLOW THESE WARNINGS COULD RESULT IN SERIOUS INJURY OR DEATH.**

The versatility of your new shotgun can be extended with an extra barrel. All shotgun barrels are interchangeable within a given gauge and chamber length. No special fitting is required. However, some important restrictions must be observed:

- Never use a barrel with a 3½" chamber on a shotgun designed for barrels with a 3" chamber.
- Never use a barrel with a 3" chamber on a shotgun designed for barrels with a 3½" chamber.
- Never use any other barrel from any other manufacturer on your shotgun. Some other brands may seem similar, but the barrels are not interchangeable.
- Never use a barrel from other Winchester shotguns, including those for the Model 1300.

## *Sight Adjustment*

**⚠WARNING**

**BEFORE ADJUSTING THE SIGHTS ON YOUR SHOTGUN, PLACE THE "SAFETY" IN THE ON SAFE POSITION. OPEN THE ACTION AND MAKE CERTAIN YOUR SHOTGUN IS COMPLETELY UNLOADED. KEEP THE MUZZLE POINTED IN A SAFE DIRECTION. FAILURE TO FOLLOW THESE WARNINGS COULD RESULT IN SERIOUS INJURY OR DEATH.**

Several Super X® Pump shotguns feature adjustable open sights; usually these are Defender, turkey and deer models. Adjustment for most sight styles is outlined in this section. Look at Figures 12,13 and 14 on pages 24 and 25 to identify the sight on your shotgun. Follow the instructions associated with that sight to make adjustments.

All sight adjustments are a matter of trial and error. Remember, it is usually necessary to adjust your sights when you change type or even brand of ammunition.

*FIGURE 12*

*FIGURE 13*

### Open Sight Elevation Adjustment

1. Place the "safety" in the on safe position. Always open the action and make sure the shotgun is completely unloaded. Always keep the muzzle pointed in a safe direction.
2. Loosen the screw on the right side of the sight using a slotted screwdriver or 5/64" Allen wrench (Figure 12, page 24).
3. To raise the point of impact, move the rear sight blade elevator upward (forward) to shoot higher on the target. To lower the point of impact, move the rear sight blade elevator down (rearward) to shoot lower on the target.
4. Tighten the Allen screw on the right side of the sight. Do not overtighten.

### Open Sight Windage Adjustment

1. Place the "safety" in the on safe position. Always open the action and make sure the shotgun is completely unloaded. Always keep the muzzle pointed in a safe direction.
2. Loosen the screw on the top of the sight using a slotted screwdriver. (Figure 12, page 24).
3. To change the point of impact, move the rear sight base to the right to shoot farther to the right on the target. Move the rear sight base to the left to shoot farther to the left on the target.

*FIGURE 14*

4. Tighten the screw on the top of the sight. Do not overtighten.

### *Ghost Ring Sight Adjustment*

1. Place the "safety" in the on safe position. Always open the action and make sure the shotgun is completely unloaded. Always keep the muzzle pointed in a safe direction.
2. Loosen the Allen screw on the top of the sight using a 1/16" Allen wrench (Figure 13, page 24).
3. To change the point of impact, move the rear sight base to the right to shoot farther to the right on the target. Move the rear sight base to the left to shoot farther to the left on the target.
4. Tighten the screw on the top of the sight. Do not overtighten.

### *Removable Sight Instructions*

1. Place the "safety" in the on safe position. Always open the action and make sure the shotgun is completely unloaded. Always keep the muzzle pointed in a safe direction.
2. Loosen the Allen screw on the right side of the sight using a 5/64" Allen wrench (Figure 14, page 25).
3. To change the point of impact, move the rear sight base to the right to shoot farther to the right on the target. Move the rear sight base to the left to shoot farther to the left on the target.
4. Tighten the Allen screw on the left side of the sight. Do not overtighten.

## *Scope Mounting Instructions*

**⚠WARNING**

**BEFORE MOUNTING A SCOPE, SIGHT OR OTHER ACCESSORIES TO YOUR SHOTGUN, PLACE THE "SAFETY" IN THE ON SAFE POSITION. OPEN THE ACTION AND MAKE CERTAIN YOUR SHOTGUN IS COMPLETELY UNLOADED. KEEP THE MUZZLE POINTED IN A SAFE DIRECTION. FAILURE TO FOLLOW THESE WARNINGS COULD RESULT IN SERIOUS INJURY OR DEATH.**

Some Super X Pump shotguns are designed to accept a scope or other optical sight. The tops of the receivers on these models are drilled and tapped for scope bases, while some models are equipped with a cantilever scope base mounted on the barrel. If your shotgun has a cantilever mount, follow the mounting instructions supplied with your scope rings and/or scope. If your shotgun's receiver is drilled and tapped for scope mounts, four holes (in line, in pairs on top of the receiver) will be visible. They are fitted with filler screws. If yours is drilled and tapped you must adhere to the following:

**NOTICE**

**YOUR WINCHESTER® SHOTGUN IS DRILLED AND TAPPED FOR THE MOUNTING OF BASES AND RINGS TO ACCOMMODATE AN APPROPRIATE SCOPE OR SIGHT. ALWAYS USE THE CORRECT BASES FOR THIS SHOTGUN WITH THE APPROPRIATE LENGTH SCREWS WHICH ARE AT LEAST 11/32" IN LENGTH.**

1. Open the action and place your shotgun on a table or other safe/secure location. Protect the finish with rags or other padding.
2. You should have two Super X Pump-compatible bases and four screws of at least 11/32" in length. Make sure your bases are compatible with your Super X Pump.
3. Clean all oil, grease or dirt from the receiver top and from the scope base parts.
4. Position your shotgun in the upright position with the top of the receiver upward.
5. Remove all four filler screws from the top of the receiver using a very small, thin-bladed gunsmithing-type screwdriver.
6. Pre-position the bases on the receiver top to determine the best orientation of the bases. Most bases have transverse grooves cut into them that are offset from the middle. These are the grooves that the crossbolts in your scope rings will pass through. The grooves are offset to allow you to position the bases to fit the design/length of your scope and the placement of the scope front to back for proper eye relief. Place both grooves to the rear, both to the front, or one in each direction, depending on your scope and desired position.
7. Once you know which configuration you will use, insert the screws through the bases and screw them into the receiver top using the correct wrench or screwdriver (usually a 3/32" hex wrench). You must use screws which are at least 11/32" in length to ensure proper thread engagement.

   Many gunsmiths find it helpful to use a drop of serviceable thread locking compound to assure the screws stay tight. Make sure the compound does not get into the action. Be careful to assure that the threads of each screw engage properly in the threads in the receiver to prevent stripping the threads in the alloy receiver.

8. Tighten the screws snugly, but do not overtighten.
9. Mount your scope rings and scope as outlined in the instructions supplied with your scope rings and/or scope. Always make sure you have the proper eye relief. Always make sure that the saddle crossbolts and the cap bolts are fully tightened before using your shotgun.

## *Length of Pull Adjustment*

**⚠WARNING**

**BEFORE PERFORMING STOCK ADJUSTMENT PROCEDURES, PLACE THE "SAFETY" IN THE ON SAFE POSITION. OPEN THE ACTION AND MAKE CERTAIN YOUR SHOTGUN IS COMPLETELY UNLOADED. KEEP THE MUZZLE POINTED IN A SAFE DIRECTION. FAILURE TO FOLLOW THESE WARNINGS COULD RESULT IN SERIOUS INJURY OR DEATH.**

Certain Super X® Pump models include a stock that can be adjusted for length of pull by adding or removing spacers to the rear of the stock. Each spacer extends the length of pull ¼", and a maximum of three spacers can be added. With longer screws (not provided), more than three spacers can be added to further extend length of pull. Additional spacers can be ordered through your local Winchester Repeating Arms dealer or by calling our Customer Service Department at (800) 322-4626.

***FIGURE 15***

### *To Adjust Length of Pull*

1. Make sure your shotgun is completely unloaded and the "safety" is in the on safe position.
2. Use a #2 cross tip (Phillips) screwdriver to remove the recoil pad at the end of the buttstock (Figure 15, page 27). Place a small amount of petroleum jelly on the screw access holes on the top and bottom of the rear of the buttstock to prevent damaging the recoil pad. Insert the screwdriver into each of the two access holes. Make certain the tip of the screwdriver engages the head of the screw. Turn the screw counterclockwise until the screw is completely loose from the stock. When both screws are free, remove the recoil pad.

*FIGURE 16*

*The stock spacers fit between the recoil pad and buttstock. With the included screws, up to three spacers can be used to increase length of pull.*

3. Add or subtract spacers to fit your firearm to your specifications (Figure 16, page 28). After making an adjustment, hold the shotgun to your shoulder to determine if the new length feels comfortable. Remember to always keep the muzzle pointed in a safe direction, the safety in the "on safe" position and the shotgun is completely unloaded.
4. When you are satisfied with the length of pull, start the screws through the pad and spacer(s) into the holes in the stock.
5. Attach the recoil pad to the stock using the screwdriver. Turn the screws clockwise to tighten. Do not overtighten the screws.

## Comb Height Adjustment

**⚠WARNING**

**BEFORE PERFORMING COMB ADJUSTMENT PROCEDURES, PLACE THE "SAFETY" IN THE ON SAFE POSITION. OPEN THE ACTION AND MAKE CERTAIN YOUR SHOTGUN IS COMPLETELY UNLOADED. KEEP THE MUZZLE POINTED IN A SAFE DIRECTION. FAILURE TO FOLLOW THESE WARNINGS COULD RESULT IN SERIOUS INJURY OR DEATH.**

Certain Super X® Pump models include interchangeable combs and comb spacers that allow you to fine tune drop at comb and achieve proper alignment with iron, electronic or optical sights. The comb height is adjusted by installing one of the included combs and, if necessary, adding or removing the included spacers. Comb height can be raised a maximum of 1-1/4" when the tall comb is installed in conjunction with four spacers. Adding one spacer will raise the comb 1/8" and a maximum of two spacers per side can be added.

### To Adjust Comb Height

1. Make sure your shotgun is completely unloaded and the "safety" is in the on safe position.
2. Two screws, one at the front and one at the rear, secure the comb. Loosen the screws using a #2 cross tip screwdriver to remove the comb (Figure 17, page 29). Turn the screw counterclockwise until the comb can be removed.

FIGURE 17

Change combs and add or remove spacers to acheive the desired comb height.

FIGURE 18

Change combs and use spacers to adjust the comb height to your specifications. (Tall comb and four spacers shown.)

3. Change combs and add or subtract spacers to fit your firearm to your specifications (Figure 18, page 29). After making an adjustment hold the shotgun to your shoulder to determine if the new comb height puts your eye in proper alignment with the sight you are using. Remember to always keep the muzzle pointed in a safe direction, the safety in the "on safe" position and make sure the shotgun is completely unloaded.
4. When you are satisfied with the comb height, start the screws through the comb and into the holes in the stock.
5. Attach the comb to the stock using the screwdriver. Turn the screws clockwise to tighten. Do not overtighten the screws.

## Cleaning and Maintenance Suggestions

**NOTICE**

**PLEASE TAKE NOTE OF THE FOLLOWING INFORMATION BEFORE CLEANING YOUR FIREARM.**

### Cleaning Parts With Special Finishes

Be especially careful when cleaning firearms with camouflage, Dura-Touch® Armor Coating and other special finishes. Always prevent these surfaces from coming in contact with cleaning solvents, barrel scrubbers and other strong chemicals. It is preferable to clean these surfaces with a light gun oil containing no solvents or with a damp cloth and mild dish soap (be sure to keep

water out of the action). When cleaning your firearm's bore and action, protect the external finishes from any contact with chemicals used. Also, avoid any contact between external finishes and other strong chemicals like those found in DEET-containing insect repellents, sunscreens, etc. Damage to camouflage, Dura-Touch and other finishes caused by chemicals is irreversible and not repairable.

**⚠WARNING**

**BEFORE PERFORMING CLEANING PROCEDURES, PLACE THE "SAFETY" IN THE ON SAFE POSITION. OPEN THE ACTION AND MAKE CERTAIN YOUR SHOTGUN IS COMPLETELY UNLOADED. KEEP THE MUZZLE POINTED IN A SAFE DIRECTION. FAILURE TO FOLLOW THESE WARNINGS COULD RESULT IN SERIOUS INJURY OR DEATH.**

**⚠WARNING**

**WEAR EYE PROTECTION WHEN DISASSEMBLING AND CLEANING YOUR SHOTGUN TO PREVENT SPRINGS, SPRING-LOADED PARTS, SOLVENTS OR OTHER AGENTS FROM CONTACTING YOUR EYES, RESULTING IN INJURY.**

**⚠WARNING**

**KEEP ALL AMMUNITION AWAY FROM THE CLEANING AREA. NEVER TEST THE MECHANICAL FUNCTION OF YOUR SHOTGUN WITH LIVE AMMUNITION. FAILURE TO FOLLOW THESE WARNINGS COULD RESULT IN SERIOUS INJURY OR DEATH.**

### *Cleaning Procedures*

Your Super X® Pump will function better and more reliably over a longer period of time if it is properly maintained and kept clean. You should clean your shotgun after every day of shooting, and more often if it becomes excessively dirty. The barrel should be cleaned and the action wiped clean and oiled after every day of shooting.

Normal maintenance can be accomplished with the barrel still attached to the receiver (oiling and wiping down). More careful cleaning requires removal of the barrel from the receiver (cleaning the barrel). A complete cleaning requires removal of the bolt and trigger group.

If you encounter a function problem (tight action when working the forearm) be sure to give your firearm a thorough cleaning to see if it solves the problem before seeking the services of our service facility or a qualified gunsmith.

1. Place the "safety" in the on safe position. Open the action and inspect the chamber and magazine to make certain they do not contain any shells. Keep the muzzle pointed in a safe direction.
2. Remove the barrel as explained under "Disassembly" on page 13.

3. Inspect the bore from both ends for leading and plastic residue that often remain in the bores from the shot cups in modern shells. Leading and plastic residue will appear as longitudinal streaks and are usually more predominant near the muzzle and just forward of the chamber. A normal amount of either is common and not serious.
4. If leading or plastic residue seems excessive you can remove it by brushing the bore with a brass brush. Soak the brush or spray the bore with a powder solvent first. Scrub until clean. To prevent bristles from breaking off, push the brush fully through the barrel each time before pulling it back through.

**⚠WARNING**

**MOST SOLVENTS ARE HIGHLY FLAMMABLE. WEAR EYE PROTECTION AND PRACTICE APPROPRIATE SAFETY MEASURES WHEN WORKING WITH SOLVENTS TO AVOID SERIOUS INJURY.**

5. After all leading and plastic residues have been removed, run a clean, dry patch through the bore. Follow this with a final, lightly oiled patch.
6. Inspect the barrel and chamber to be certain no patches have inadvertently been left in them. Remove any that remain.
7. Reassemble the shotgun and wipe all exposed metal surfaces with an oiled cloth making sure to wipe away all finger marks where moisture could accumulate. Any dried oil in the receiver area should also be removed.
8. Lightly oil your firearm at the points described on page 10. Regular, light oiling is extremely important to the durability and reliable operation of your shotgun.

### *Additional Disassembly*

One of the advantages of a Super X Pump is the ability to disassemble the action for cleaning. Under very harsh weather conditions and in dirty environments just knowing that parts are clean and lightly oiled can add an extra measure of confidence to your shooting experience.

Make sure you have a clean place to work and a good place to put the components as they are disassembled (Figure 19, page 32).

### *Removal of the Barrel*

1. Unscrew and remove the magazine cap. Remember, always keep the muzzle pointed in a safe direction.
2. Slide the barrel forward, withdrawing the barrel from the receiver and disengaging the barrel bracket from the front end of the magazine tube.
3. Immediately screw the magazine cap back onto the magazine tube at least three full turns.

*FIGURE 19*

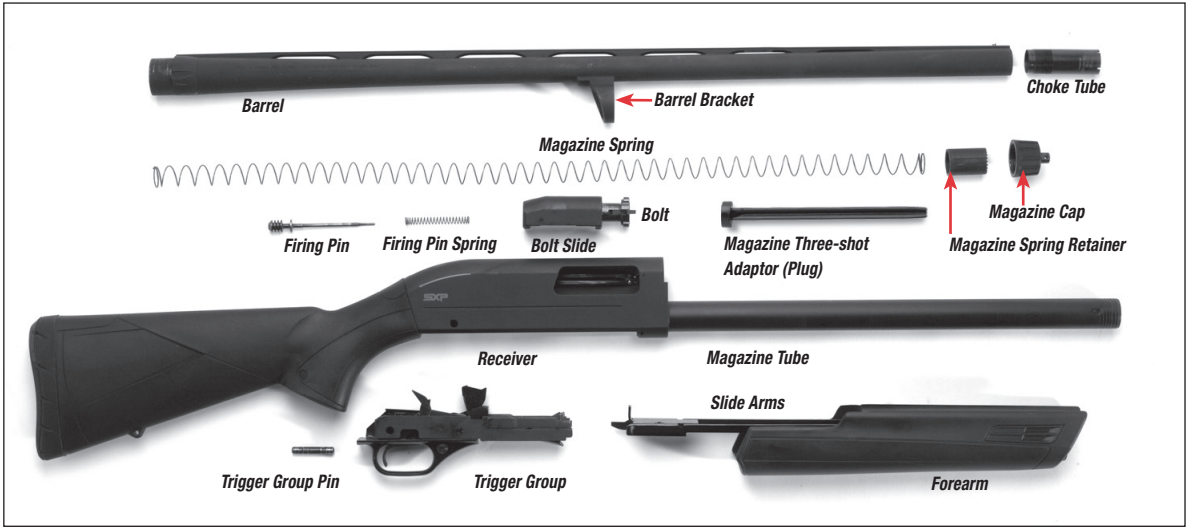


### REMOVAL OF THE TRIGGER GROUP

Removing the trigger group is another necessary procedure in performing thorough maintenance of your shotgun. It is easy to do, and removing it allows you to perform cleaning and maintenance whenever and wherever required. With both the trigger group and bolt assembly removed, it is easy to wipe out any debris or moisture that sometimes accumulates in the receiver.

The trigger group should be removed before you attempt to remove the bolt assembly.

1. Make sure the firearm is completely unloaded as explained previously in this owner's manual.
2. Cycle the action by sliding the forearm rearward and then forward. This puts the hammer in the cocked position. Place the "safety" in the on safe position.

3. Place your firearm with the trigger guard facing up on a suitable surface that will protect the receiver finish and stock.
4. Remove the trigger guard pin by pushing it out from the left side of the receiver, the side opposite the ejection port. Any sturdy pushing tool that is smaller in diameter than the pin and that will not mar the finish is acceptable. Make sure you can maintain a good grip on the pushing tool and on your shotgun while you push.
5. Push the pin through sufficiently until it can be grasped with your fingers. Pull it the rest of the way out. If it cannot be removed with fingers, make sure your pushing tool or punch has a diameter small enough so that it will push the pin completely through without the tool damaging the hole.
6. With the pin removed, lift the trigger group out of the receiver by lifting upward and pulling rearward (Figure 20, page 33).

### *Removal of the Slide and Bolt*

1. Remove the barrel and trigger group as explained earlier, but do not replace the magazine cap.
2. With the bolt assembly attached to the slide arm, simultaneously slide both assemblies forward and out of the front of the receiver. Note that as the bolt assembly passes by the ejection port, there may be some resistance from the ejector spring. Carefully work it past the resistance.

***FIGURE 20***

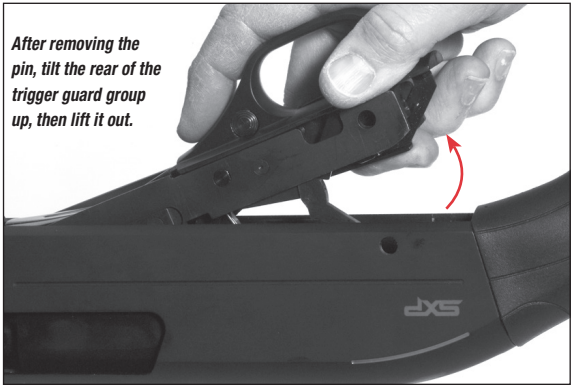


### *Removal of the Firing Pin*

1. Remove the bolt assembly from the shotgun as explained previously.
2. On 3½" models, slide the bolt shroud to the forward-most position before attempting to remove the bolt slide assembly from the slide arms or removing the firing pin.
3. Grasp the bolt assembly, bottom side up (flat side), and push the rear of the firing pin forward with your forefinger. While holding the firing pin in this position, use your other hand to tilt the front end of the slide arm and move it slightly forward.

**FIGURE 21**

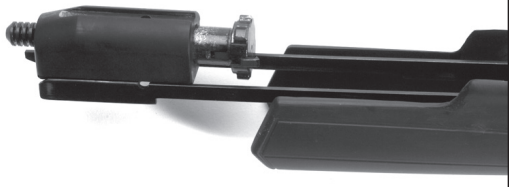

*Position the bolt assembly on the slide arms.*

4. Lift up on the slide arm and disengage the curved tongue on the slide arm from the groove in the firing pin. This detaches the slide arm from the bolt slide.
5. The firing pin is under spring tension and will snap out the rear of the bolt when your forefinger releases it. Control the pin as you remove the firing pin and spring.

For cleaning purposes no further disassembly is necessary or recommended. Do not disassemble your Super X Pump further than shown in Figure 19 on page 32. Doing so may void your warranty. For repairs that require further disassembly contact a Winchester Firearms Authorized Service Center or a qualified gunsmith as explained under "Parts, Service, Repair and Questions" on page 36.

### *Assembly of the Firing Pin, Bolt and Slide*

1. Reinstall the firing pin spring over the firing pin. Either end of the spring can go on first.
2. On 3½" models, slide the bolt shroud to the forward-most position before attempting to install the firing pin or attach the bolt slide assembly to the slide arms.
3. Insert the firing pin/spring assembly into the rear opening of the bolt slide, pin end first.
4. To reinstall the bolt assembly on the slide arm, push or compress the knob end of the firing pin sufficiently into the hole in the bolt slide so that the large space between the grooved knob and the flange on the firing pin is centered in the round hole in the bolt slide.
5. Place the curved tongue, located on the slide arm, into the space between the knob and flange and slowly release pressure on the end of the firing pin. Let the flange on the firing pin pull the tongue toward the rear of the bolt assembly.
6. Remove the magazine cap.
7. Hold the slide arms and bolt/slide arm assemblies together (Figure 21, page 34). Slide the forearm assembly onto the magazine tube.
8. Carefully guide the slide arms and bolt/slide arm assemblies into the front of the receiver. As the assemblies enter the receiver, slide them fully rearward (Figure 22, page 35).

### *Reinstallation of the Trigger Group*

1. The bolt assembly, slide arms and forearm should be attached to the receiver before installing the trigger group.
2. Ensure the hammer is in the cocked position by pushing it straight back until it locks into place and the "safety" is in the on safe position.
3. Turn the shotgun over with the open bottom of the receiver facing upward. Hold the trigger group at an angle to the receiver (about 45 degrees) and then engage the front tabs on the trigger group with the corresponding slots in the magazine throat at the forward end of receiver opening as shown in Figure 20 on page 33.
4. Carefully insert the front of the trigger group into the receiver opening, then lower the rear into the receiver opening until it is parallel with the receiver. It may be necessary to slide the forearm into different positions until the trigger group fits flush into the receiver. When properly installed it will fit easily and the trigger group pin hole will be in alignment.

**NOTICE**

**BE CAREFUL WHEN REINSTALLING THE TRIGGER GROUP. NEVER FORCE PARTS INTO POSITION. DO NOT ATTEMPT TO INSTALL THE BOLT ASSEMBLY AFTER THE TRIGGER GROUP IS INSTALLED. FAILURE TO FOLLOW THESE INSTRUCTIONS MAY DAMAGE YOUR FIREARM.**

*FIGURE 22*

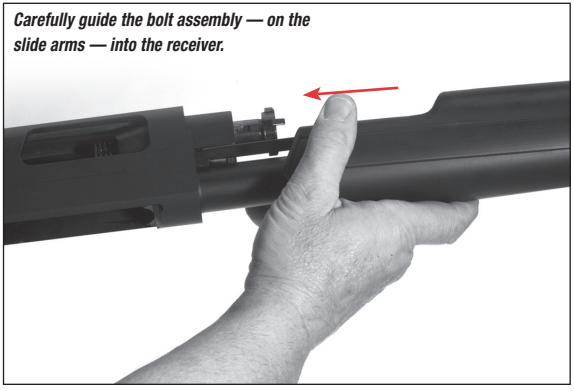

*Carefully guide the bolt assembly — on the slide arms — into the receiver.*

5. Align the trigger group with the hole in the receiver and push the trigger group pin through the receiver until it is flush with both sides of the receiver. The pin should pass through easily with little force. If significant resistance is felt, remove the trigger group and repeat step one.

Your firearm is now fully assembled. Immediately confirm that the "safety" is in the on safe position. Take time to wipe down and clean all external surfaces as explained under "Cleaning and Maintenance Suggestions" on pages 29-31.

**NOTICE**

**NEVER ATTEMPT TO TAKE YOUR FIREARM APART FURTHER THAN EXPLAINED IN THIS OWNER'S MANUAL. YOUR FIREARM IS A SPECIALIZED, FINELY FITTED MECHANISM. YOU MAY PERMANENTLY DAMAGE IT BY ATTEMPTING TO DISASSEMBLE THE INNER MECHANISM. IF FURTHER DISASSEMBLY FOR SERVICE OR CLEANING IS REQUIRED, TAKE YOUR FIREARM TO A QUALIFIED GUNSMITH, OR CONTACT OUR ARNOLD, MISSOURI SERVICE FACILITY AS EXPLAINED UNDER "PARTS, SERVICE, REPAIR AND QUESTIONS."**

### *Other Cleaning Suggestions*

After extended periods of heavy use, your firearm should be taken to a qualified gunsmith to have the action disassembled for professional cleaning and lubrication.

## *Parts, Service, Repair and Questions*

If your Winchester® firearm should ever need service or repair, it is often best to utilize one of our Authorized Repair Centers. In some cases it is appropriate to use the Winchester Repeating Arms Service Center in Arnold, Missouri. A list of Authorized Repair Centers was included with your new firearm. If you need a new listing, contact us. We can help you determine the best place to service your firearm.

In order to avoid delays, it is important to never send your firearm directly to our facility without direct authorization from one of our service specialists. This avoids possible delays in obtaining service. Contact us at (800) 322-4626 for details on how to receive service before sending your firearm.

Parts listings, Authorized Repair Center lists, service procedures, service/repair form and general product information are also found on the Web at: **winchesterguns.com.**

When returning your firearm for servicing, you must do the following:

1. Be sure it is completely unloaded.
2. Remove the scope or other optics.
3. Package it securely in a cardboard container.
4. Enclose the service/repair form available at winchesterguns.com or a letter that clearly describes the trouble experienced, the ammunition used and the repairs desired. Also include your name and a daytime phone number where you can be reached.
5. If convenient, send a copy of the service/repair form or letter to us separately.
6. Never return ammunition with your firearm. It is against postal and most commerce regulations.

### *Parts, Service, Repair Status And Technical Questions*

**Winchester Repeating Arms Parts and Service**
3005 Arnold Tenbrook Road
Arnold, MO 63010-9406
(800) 322-4626

### *General Product And Historical Questions*

**Winchester Repeating Arms Customer Service**
275 Winchester Avenue
Morgan, UT 84050-9333
(800) 945-5237

**⚠WARNING**

**PARTS ARE MADE FOR WINCHESTER BRAND FIREARMS MANUFACTURED BY OR FOR WINCHESTER REPEATING ARMS, AND SHOULD NOT BE USED IN OTHER FIREARMS, EVEN THOUGH MODELS MAY BE SIMILAR. IMPROPERLY FITTED PARTS MAY BE DANGEROUS.**

## *Website Information*

An information resource for Winchester Repeating Arms is found on the World Wide Web.

- List of Authorized Repair Centers.
- Customer Service information.
- Firearm Service/Repair Form.
- Answers to many technical and historical questions.
- Links to helpful sites.

Go to: **winchesterguns.com**

Winchester Repeating Arms

275 Winchester Avenue

Morgan, UT, U. S. A. 84050-9333

winchesterguns.com

Winchester is a registered trademark of Olin Corporation.