MAGELLAN OUTDOORS®

Instruction Manual

Mission 8P Tent

Style# 179539

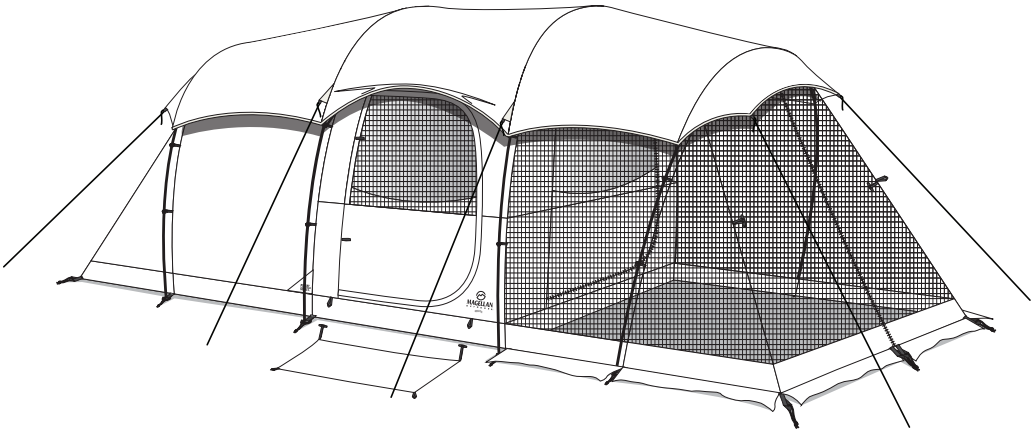

Please keep this instruction manual for future reference

Customer Service: (888) 922-2336

7:00 am to 10:00 pm CST (daily)

Live Chat at: www.academy.com

Email: customerservice@academy.com

(Made in Bangladesh)

Table of Contents

Warnings……..…2
Parts List……...3
Assembly Instructions…….....4-5
Care and Maintenance……...……6

Note: Before beginning assembly of product, make sure all parts are present. Compare parts with package content list and hardware contents. If any part is missing or damaged do not attempt to assemble the unit. Contact customer service for replacement parts.

Warnings

IMPORTANT SAFETY AND TIP INFORMATION

TO MAXIMIZE THE ENJOYMENT OF YOUR PRODUCT PLEASE ASSEMBLE AND USE YOUR PRODUCT AS SAFELY AS POSSIBLE.

THE PURPOSE OF THE SAFETY ALERT SYMBOL ⚠ IS TO CALL YOUR ATTENTION TO POSSIBLE HAZARDS RELATING TO THE USE AND ASSEMBLY OF YOUR PRODUCT.

THE PURPOSE OF THE TIP SYMBOL ☞ IS TO CALL YOUR ATTENTION TO SUGGESTIONS THAT WILL ASSIST YOU IN THE ASSEMBLY/DISASSEMBLY PROCESS AND ENHANCE YOUR CAMPING EXPERIENCE. WHEN YOU SEE THESE SYMBOLS, PLEASE CLOSELY FOLLOW THE INFORMATION PROVIDED.

⚠ WARNING

WARNING: KEEP ALL FLAME AND HEAT SOURCES AWAY FROM THIS TENT FABRIC. This fabric is not fireproof! It is made with flame resistant fabric which meets CPAI-84 specifications. The fabric may burn if left in continuous contact with any flame source. The application of any foreign substance to the tent fabric may render the flame resistant properties ineffective.

- Do not erect this product near an open flame.
- Never use any fuel burning, oxygen consuming devices, or any device that produces fumes (including, but not limited to cooking stoves, lanterns, candles, hibachis, or heaters) in or around your product. Inhalation of fumes may result in carbon monoxide poisoning, injury or death.
- Your product is water repellent, however, during heavy rain some leakage may occur. Keep objects from touching the inside, as objects may cause leakage at the point of contact.
- To prevent seam leakage (floor seams in particular), a seam sealer compound must be applied to the seams. Use recommended water repellent compounds on our product. Read the label on any product before using. Questions? Call our Customer Service number.
- Your recreational product is made from synthetic fabric that has been treated and is highly resistant to the sun's Ultraviolet (UV) light. No fabric can withstand prolonged exposure to sunlight.
- Do not spray or apply insecticide or pesticide on your product. It may damage UV resistant or water repellent properties of this product.
- Our recreational products are constructed to rigid specifications. They are not made, however, for extreme weather, climates, or environments. Modification, abuse and extreme weather are conditions that may adversely affect the structural integrity of the tent.
- Additional precautions may be necessary during inclement or unexpected weather conditions. Here are some tips that may help during these times.

☞ Use guy lines to help secure your structure during periods of heavy winds.

☞ Storms or steady rains may cause water to collect in pockets on the roof. This will add weight, which can weaken the overall structure, causing the tent to collapse. Maintain a watchful eye and remove any water accumulation that may occur.

Parts List

	Part	Image	Qty
A	Tunnel Tent Body and Separate Tent Rainfly	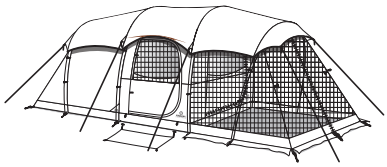	1
B	Fiberglass Poles Set 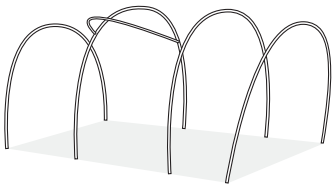	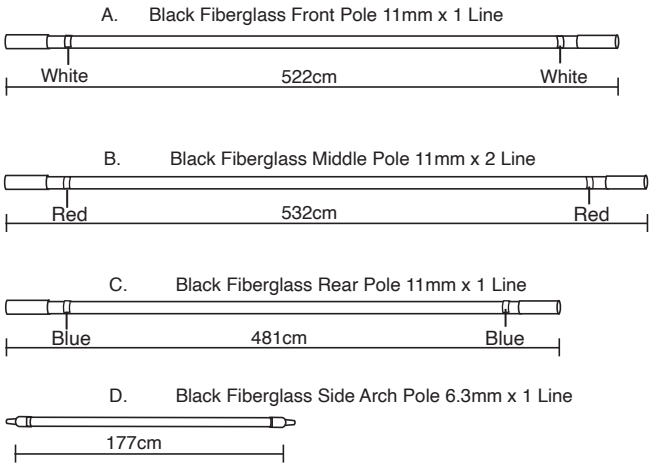	1
C	Carry bag		1
D	Pole Bag		1
E	Stake bag		1
F	Guy rope		8
G	Steel stake		23
H	Detachable mud mat		1
I	Tablet Entertainment Pocket		1

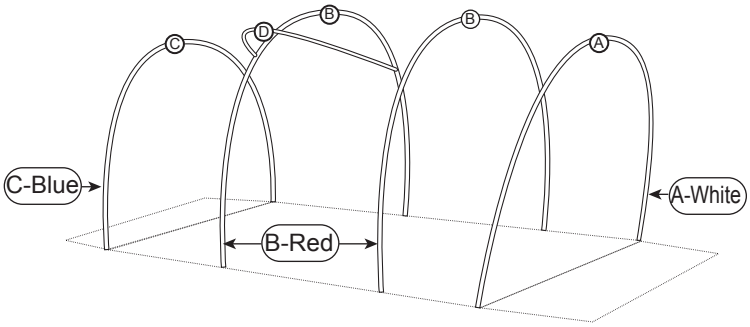

Assembly Instructions

Step 1:

1.Verify package contents listed on Page 3 by emptying contents of bag(s) and confirming all parts are undamaged.

☞ Tip: Do this at home prior to your first use of the product.

2. Remove tent and poles from carry bag. Extend all poles and sort into groups based on color tape on pole end. You will find Red color tape pole line 2ea (For Middle) + White color tape pole line 1ea (For Front) + Blue color tape pole line 1ea (For Rear) + Black color short pole line 1ea (For Fly).

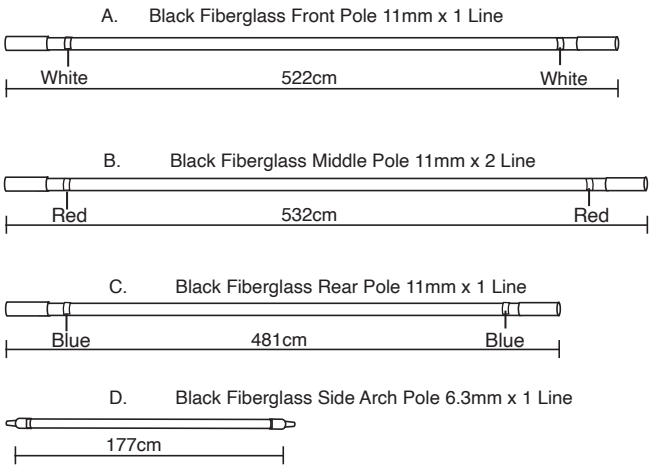

Step 2:

3. Select a smooth, level site and spread out the tent body. Place tent body in the correct orientation on the camp site and secure the main four corners of the tent into the ground using the included tent stakes. Place stakes into rope loops and hammer them into the ground.

4. Spread the tent out flat, floor side down. Use the illustration below as guide. Insert stakes into the two stake loop at the end of the opposite end. Hammer the stakes into the ground at a 45 degree angle using a hammer or mallet. Position poles as shown below (as shown in Fig. 1.)

5. Begin slide the rear blue tape marked pole into the rear pole sleeve. Have one person place and hold an end of the rear pole (Blue Tape). At this point set up pin need to place inside of the pole end steel ferrule (Fig. 2.)Following the same process now need to slide middle two line red tape pole into the middle pole sleeve. At this point set up pin need to place inside of the pole end steel ferrule. Now for balance white color need to slide into the front pole sleeve. At this point set up pin need to place inside of the pole end steel ferrule.

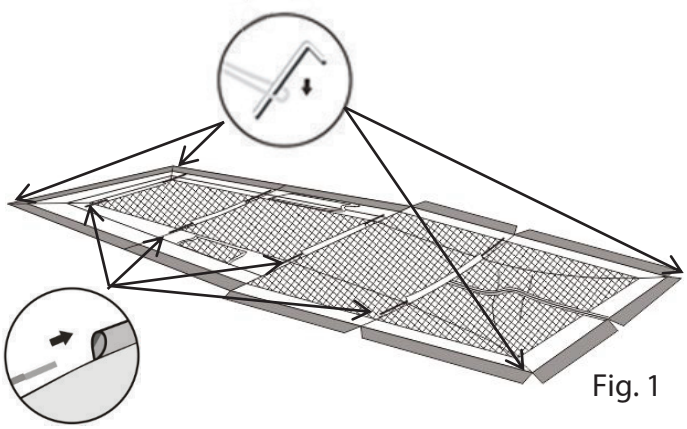

Fig. 1

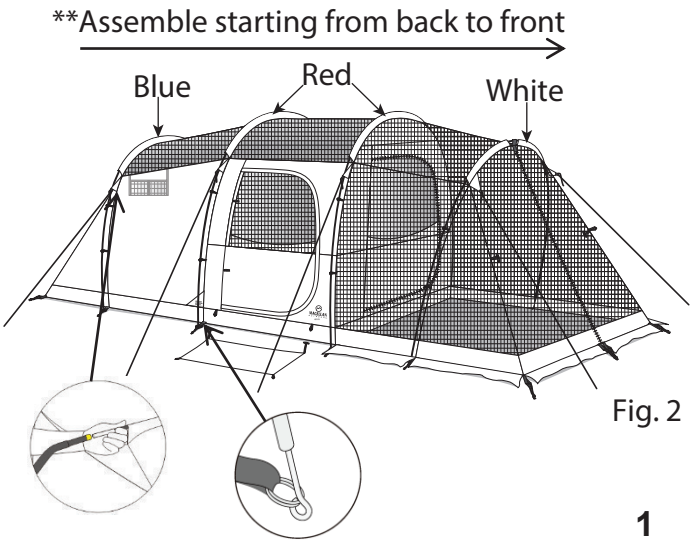

Fig. 2

Assembly Instructions

Step 3:
7. Attach all G hooks to the poles to secure and shape the tent. (Fig. 3.)

8. Attach the included mud mat (H) to tent with the toggles. (Fig. 4.)

9. Making sure the base of the tent is fully spread out, pull the floor tight and stake out the rest of the tent. (Fig. 5.)

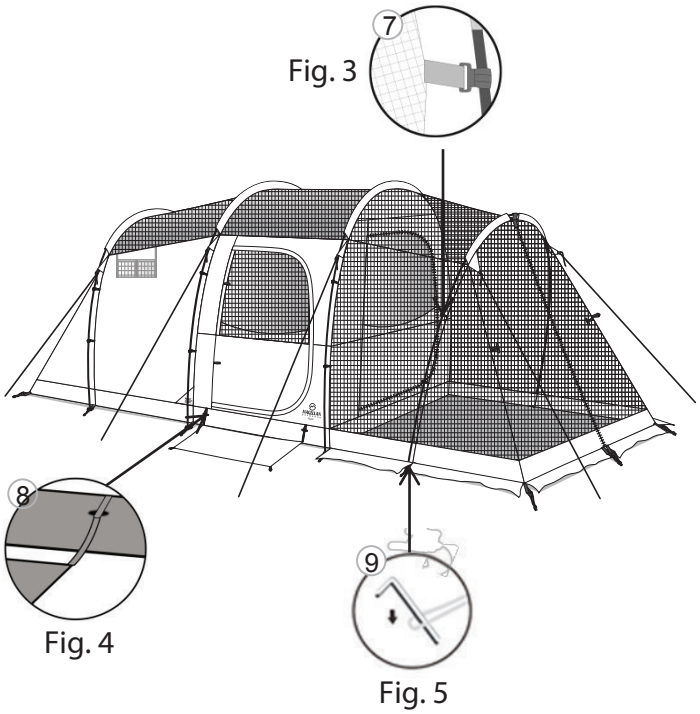

Step 4:
10. Lay out rain fly, place the rain fly over the top of tent body.
11. Push the awning pole through the sleeve of rain fly on top of the side door. (Fig. 6.)
12. Insert the ends of awning pole into the pole clip. (Fig. 7.)

13. Attach S hooks on rain fly to the tent. (Fig. 8.)
14. Stake out guy lines (F) away from the tent with lines at roughly a 45 degree angle to the ground. Adjust using the plastic sliders. (Fig. 10.)

**INCLUDED TABLET ENTERTAINMENT POCKET
15.The tablet entertainment pocket (I) can be hung on the interior of the tent (Fig. 9.) by fabric loops across the back or side of the tent. Place the adjustable toggles through the fabric loops and adjust the length of the line as needed to fit the space.

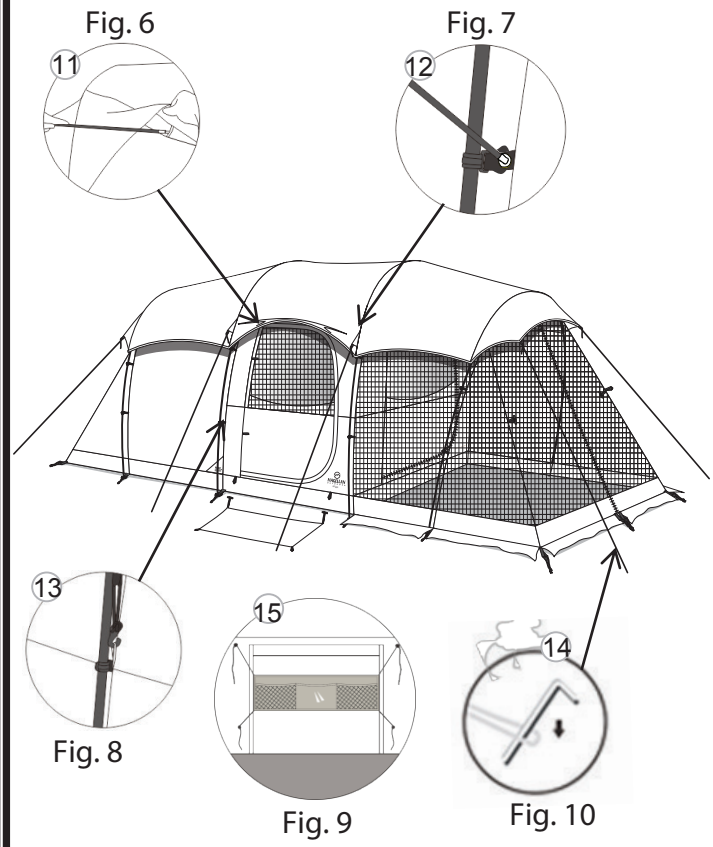

IMPORTANT NOTES BEFORE YOU BEGIN:

- Assemble your tent before camping to become familiar with the assembly.
- Setup is possible for one person, however two people are recommended.
- Select a clean, level area for the campsite free of debris and sharp objects, and away from a natural watercourse.
- Use of a ground cloth is recommended to prolong the life of the tent floor and provide additional insulation and moisture protection.
- To prevent damage to the zippers, unzip the doors and windows of the tent prior to disassembly, allowing air to move freely.
- Seam sealing the inside stitched seams of the tent is recommended. This will improve weather resistance. Discoloration may occur if applied to outside seams. (Seam sealer not included).

Care and Maintenance

CLEANING:

Allow dirt to dry on the tent fabric after a rainfall before lightly sweeping it off with a brush. For tougher stains, spray the area with water and lightly wipe it off with a few strokes. Do not use washer or dryer.

DO NOT SCRUB THE FABRIC. ALWAYS MAKE SURE YOUR TENT IS COMPLETELY DRY BEFORE REPACKING.

Although our products are manufactured according to rigorous specifications, periods of wind or rain may loosen the stakes and cause the frame to sink into the ground. This will weaken the structure's overall rigidity. Puddles may also form on the roof if the unit has not been assembled tightly. If pooling should occur it is advisable to drain the fly to avoid possible damage to frames and fabric. Adjustment of guy lines may be necessary. In case of inclement weather, remove valuables and seek appropriate shelter. Intended for recreational use only.

For your tent, screen house or canopy DO NOT...

- Pitch near an open fire.
- Use candles or open flames of any kind in or near.
- Leave children unattended inside.
- Use fuel-burning, oxygen-consuming devices (heaters, lanterns, cooking stoves or other flame sources) inside.
- Refuel lamps, heaters or stoves inside.
- Smoke inside.
- Store flammable liquids inside.
- Use water repellent compounds other than those recommended for use on outdoor equipment.
- Spray with insecticide.
- Store on concrete floor.

For your tent, screen house or canopy DO...

- Always extinguish campfire before sleeping or leaving the area.
- Exercise care when using electricity and lighting.
- Make certain it is properly ventilated in all weather conditions. In extreme weather conditions, snow could obstruct airflow and cause asphyxiation. Clear frequently.
- Anchor securely to provide additional security in changing climatic conditions. Snow pegs, skis and/or heavy rocks may be necessary to supplement stakes and guy lines.
- Take down and store properly after camping.

Be certain campfires are extinguished. Dispose of trash appropriately.